SERVICE INFORMATION

PIONEER
The Art of Entertainment

No. : SI-A48078
Date: Apr.18,1994

MODEL NO.	*	SER. NO.	MODEL NO.	*	SER. NO.	MODEL NO.	*	SER. NO.
SD-P5107/SUW/G	A	NK5600681-						

#	DETAIL OF CHANGE(S)	#	REASON FOR CHANGES
1	Change of a Power Transformer in Power Supply Assy	1	To prevent flicker of picture

POWER SUPPLY Assy

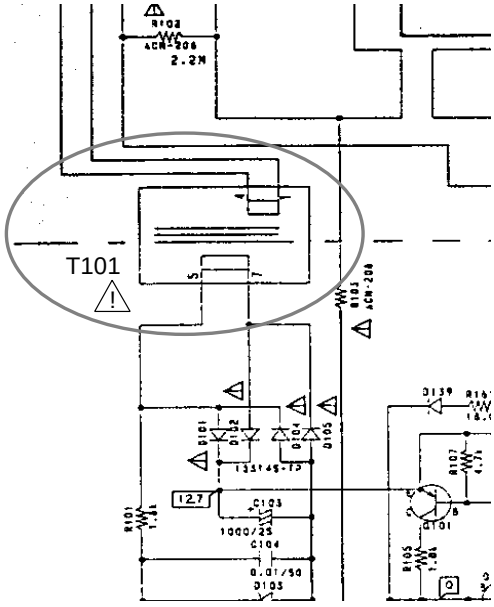

SERVICE MANUAL
MODEL:SD-P5107 S/M NO.:ARP2815 PAGE : 7
MODEL: S/M NO.: PAGE:
MODEL: S/M NO.: PAGE:
MODEL: S/M NO.: PAGE:

Ref. *	Ref. #	CURRENT PARTS SYMBOL/DESCRIPTION	CURRENT PARTS PART NUMBER	CODE	NEW PARTS PART NUMBER	NEW PARTS SYMBOL/DESCRIPTION
A	1	T101	ATT1194	2	ATT1246	T101

PIONEER ELECTRONIC CORPORATION (SPC48-591,AA-A3680 SPC-HK 104)

Issued by:

Y.IMAMIZU, MANAGER
HE Engineering Section
Service Dep.

Pioneer

SERVICE INFORMATION

Date: Oct.13,2000 **No.:** **SI-D01008** **(1/2)**

MODEL No. * **SER.No.** **S/M No.** **PG**

See to following page

	#	CHANGE
DETAIL	1	When change the CRT DRIVE IC□ｉIC5101,IC5151,IC5201□ｊ from TDA6120Q to TDA6120QN2 in Amplifire Assy□ｉAWV1797□ｊ, add diodes between 2pin and 6pin of each TDA6120QN2, and spread the silicone bond(GYA1011) there.
REASON	1	Production convenience

Please refer to p.110
IC5101 in R CRT DRIVE Assy
IC5151 in G CRT DRIVE Assy

Please refer to p.111
IC5201 in B CRT DRIVE Assy

Difference of the CRT DRIVE IC

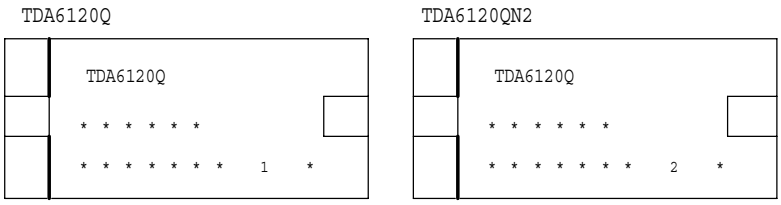

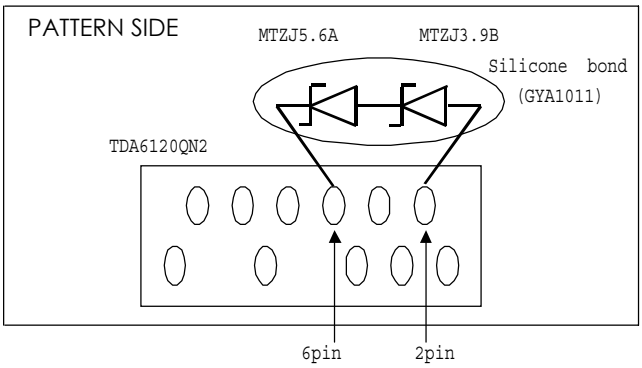

Ref *	#	CURRENT SYMBOL/DESCRIPTION	PARTS PART NUMBER	CO DE	NEW PART NUMBER	PARTS SYMBOL/DESCRIPTION
A	1	IC5101	TDA6120Q	2	TDA6120QN2	IC5101
A	1		added	-	MTZJ5.6A	D5107
A	1		added	-	MTZJ3.9B	D5108
A	1	IC5151	TDA6120Q	2	TDA6120QN2	IC5151
A	1		added	-	MTZJ5.6A	D5157
A	1		added	-	MTZJ3.9B	D5158
A	1	IC5201	TDA6120Q	2	TDA6120QN2	IC5201
A	1		added	-	MTZJ5.6A	D5207
A	1		added	-	MTZJ3.9B	D5208

PIONEER CORPORATION

Y.YAMAMOTO ,MANAGER
HE

Service Engineering Section
Service Division

NOTE:PARTS CODE
1;Changeable from old to new.
2:Not Interchangeable an all.
3:Interchangeable in both ways
5:Do not use old parts

Memo: MTV01014 KT,9
AA-D2120
AA-D2212

Classify:

MODEL No.	*	SER.No.	S/M No.	PG
PRO-510HD/KUXC/CA	A	R/C	ARP3047	110
PRO-610HD/KUXC/CA	A	R/C	ARP3047	110
PRO-710HD/KUXC/CA	A	R/C		
SD-532HD5/KBXC	A	R/C	ARP3047	110
SD-532HD5/KUXC/CA	A	R/C	ARP3047	110
SD-582HD5/KUXC/CA	A	R/C	ARP3047	110

Pioneer

SERVICE INFORMATION

Date: Aug.17,2000 **No.:** **SI-D01007-G** **(1/1)**

MODEL No.	*	**SER.No.**	**S/M No.**	**PG**
PDP-502MX/LUCBW	A	3206	ARP3044	
PDP-502MXE/YVLDK	A	3226	ARP3044	
PDP-505HD/KUC	A	1051	ARP3044	

	#	**DETAIL**
SYMPTOM	1	Power down (D407 lights on)
CAUSE	1	Short of valuable resistor (VR401) and wiring pattern.
SERVICE REMEDY	1	Position of VR301 and VR401 is changed (refer to the figure below).
FACTORY COUNTER -MEASURE	1	Addition of crystal damper between base and VR301, VR401 in POWER ASSY(AWV 1775).

POWER ASSY(AWV1775) PART SIDE

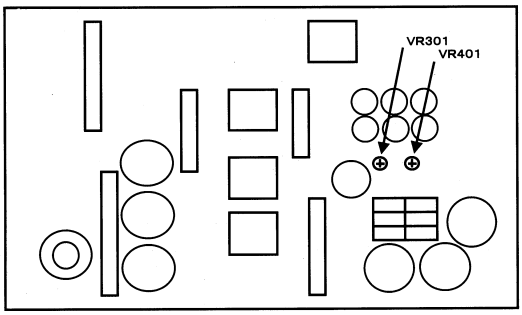

Side view of valuable resistor

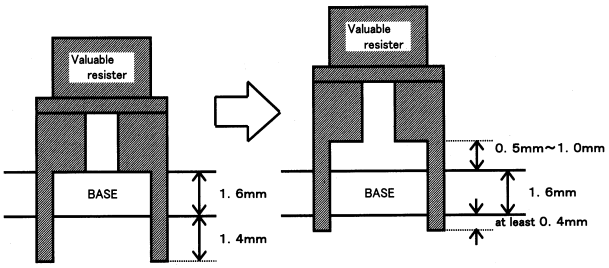

Ref		**CURRENT**	**PARTS**	**CO**	**NEW**	**PARTS**
*	#	**SYMBOL/DESCRIPTION**	**PART NUMBER**	**DE**	**PART NUMBER**	**SYMBOL/DESCRIPTION**

PIONEER ELECTRONIC CORPORATION

T.NAKAGAWA ,MANAGER
DP
Technical Support group
Service Support Div.

NOTE:PARTS CODE
1:Changeable from old to new.
2:Not Interchangeable an all.
3:Interchangeable in both ways
5:Do not use old parts

Memo: PJ/NO. 01-D01
MTV01-004
AA-D1974

Classify:

Pioneer

SERVICE INFORMATION

Date: June. 1, 2000 **No.:** **SI-D01006** **(1/2)**

MODEL No.	*	SER.No.	S/M No.	PG
PDP-502MX/LUCBW	A	R/C	ARP3044	
PDP-502MXE/YVLDK	A	R/C	ARP3044	
PDP-505HD/KUC	A	R/C	ARP3044	
PDP-502MX/LUCBW	B	04286-	ARP3044	
PDP-502MXE/YVLDK	B	04626-	ARP3044	
PDP-505HD/KUC	C	01635-	ARP3044	

	#	CHANGE
DETAIL	1	Change and addition of resistors in Digital video ass'y
	2	Change of Digital video ass'y

REASON 1,2 Procurement convenience

As to circuit change, please see page 2/2.

Ref *	#	CURRENT SYMBOL/DESCRIPTION	PARTS PART NUMBER	CODE	NEW PART NUMBER	PARTS SYMBOL/DESCRIPTION
A	1	R3207	RD1/4PU222J	2	RS1/16S222J	R3207
A	1		Added	-	RS1/16S0R0J	R3481,3482,3483,3500
A	1		Added	-	RS1/16S0R0J	R3487
B	2	Digital video ass'y	AWV1815	2	AWV1838	Digital video ass'y
C	2	Digital video ass'y	AWV1791	2	AWV1839	Digital video ass'y

PIONEER CORPORATION

Y.YAMAMOTO ,MANAGER
HE
Service Engineering Section
Service Division

NOTE:PARTS CODE
1;Changeable from old to new.
2:Not Interchangeable an all.
3:Interchangeable in both ways
5:Do not use old parts

Memo: EM, 73
SPC55-008
AA-D1980

Classify:

Digital video ass'y

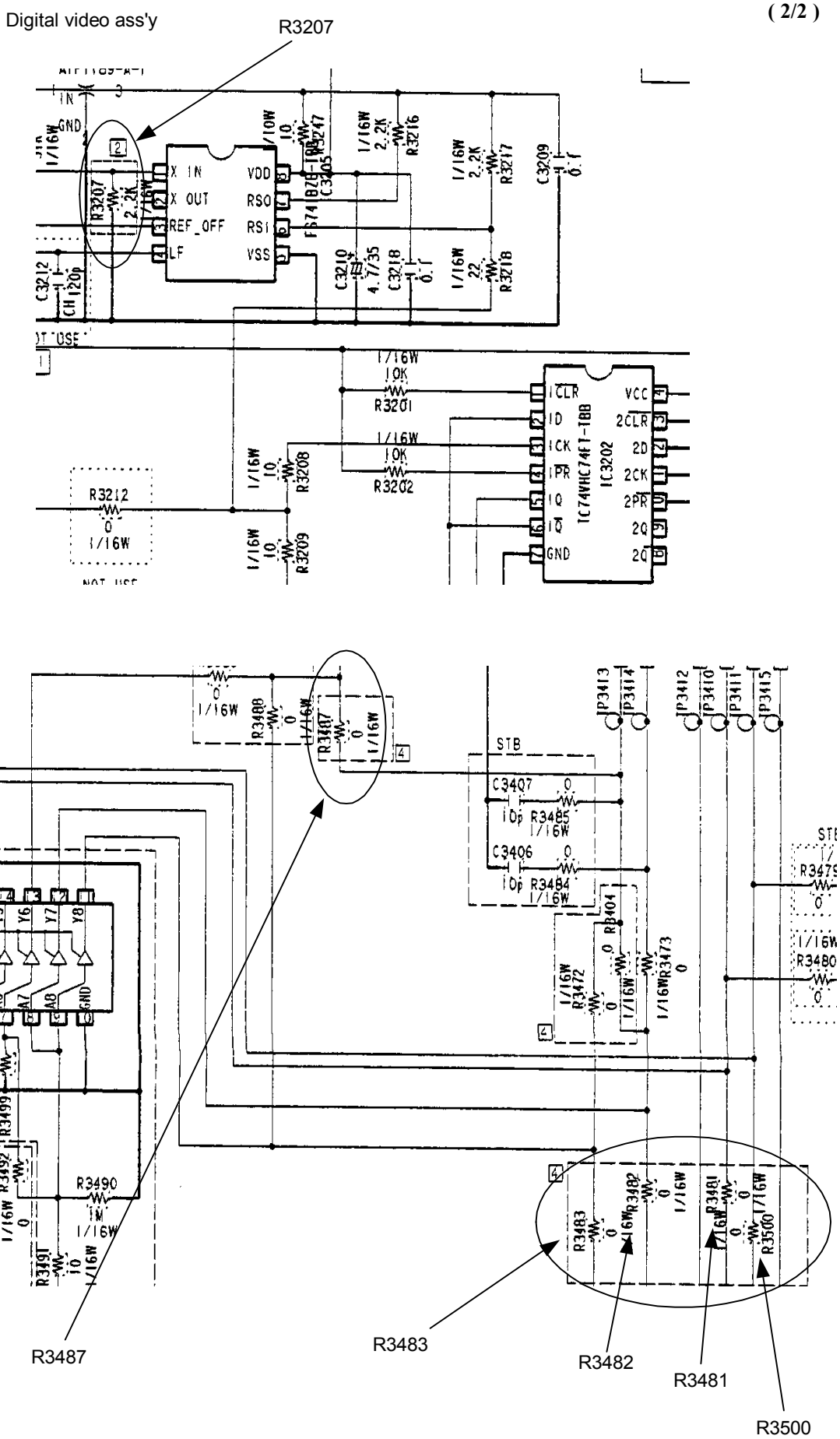

Pioneer

SERVICE INFORMATION

Date: June. 1, 2000 **No.:** **SI-D01005** **(1/1)**

MODEL No.	*	**SER.No.**	**S/M No.**	**PG**
PDP-502MX/LUCBW	A	03657-	ARP3044	
PDP-502MXE/YVLDK	A	03601-	ARP3044	
PDP-505HD/KUC	A	01251-	ARP3044	
PDP-502MX/LUCBW	B	R/C	ARP3044	
PDP-502MXE/YVLDK	B	R/C	ARP3044	
PDP-505HD/KUC	B	R/C	ARP3044	

	#	**CHANGE**
DETAIL	1	Change of FFC between Analog video ass'y and Digital video ass'y
	2	Change of resistors in Digital video ass'y

REASON	1	To improve the reliability of CLK, H.D,V.D signal between Analog video ass'y and Digital video ass'y
	2	Circuit change of Digital video ass'y

Ref		**CURRENT**	**PARTS**	**CO**	**NEW**	**PARTS**
*	#	**SYMBOL/DESCRIPTION**	**PART NUMBER**	**DE**	**PART NUMBER**	**SYMBOL/DESCRIPTION**
A	1	FFC	ADE1180	2	ADE1181	FFC
B	2	R3405,3407,3408	RS1/16S100J	-	Deleted	
B	2		Added	-	RS1/16S100J	R3475,3476,3477

PIONEER CORPORATION

Y.YAMAMOTO ,MANAGER
HE
Service Engineering Section
Service Division

NOTE:PARTS CODE
1;Changeable from old to new.
2:Not Interchangeable an all.
3:Interchangeable in both ways
5:Do not use old parts

Memo: EM, 73
SPC54-391
AA-D1797

Classify:

Pioneer

SERVICE INFORMATION

Date: May.18,2000 **No.:** **SI-D01004** **(1/1)**

MODEL No. * **SER.No.** **S/M No.** **PG**

See to following page

	#	CHANGE
DETAIL	1	Addition of a resistor(R7429) and a transistor(Q7112)
	2	Addition of a transistor(Q7326)
	3	Change of a resistor(R7429 --> R7153 ---> R7429)
	4	Deletion of a transistor(Q7112)
REASON	1	To prevent the noise in 3-picture search mode.
	234	To prevent the noise in 3-picture search mode. (Production convenience)

As for Circuit diagram, please see page 3/3.

Ref *	#	CURRENT SYMBOL/DESCRIPTION	PARTS PART NUMBER	CODE	NEW PART NUMBER	PARTS SYMBOL/DESCRIPTION
A	1		Added	-	RD1/4PU102J	R7429
A	1		Added	-	2SC2712	Q7112
A	2		Added	-	2SC2712	Q7326
A	3	R7429	RD1/4PU102J	2	RS1/16S102J	R7153
A	3	R7153	RS1/16S102J	2	RS1/16S102J	R7429
A	4	Q7112	2SC2712	-	Deleted	

PIONEER CORPORATION

Y.YAMAMOTO ,MANAGER

Service Engineering Section

Service Division

NOTE:PARTS CODE
1;Changeable from old to new.
2:Not Interchangeable an all.
3:Interchangeable in both ways
5:Do not use old parts

Memo: EM, 9
SPC54-463 AA-D
SPC54-464 1930

Classify: AA-D
1938

MODEL No.	*	SER.No.	S/M No.	PG
PRO-510HD/KUXC/CA	A	R/C	ARP3047	45
PRO-610HD/KUXC/CA	A	R/C	ARP3047	45
PRO-710HD/KUXC/CA	A	R/C		
SD-532HD5/KBXC	A	R/C	ARP3047	45
SD-532HD5/KUXC/CA	A	R/C	ARP3047	45
SD-582HD5/KUXC/CA	A	R/C	ARP3047	45

S/M P45

SIGNAL ASSY

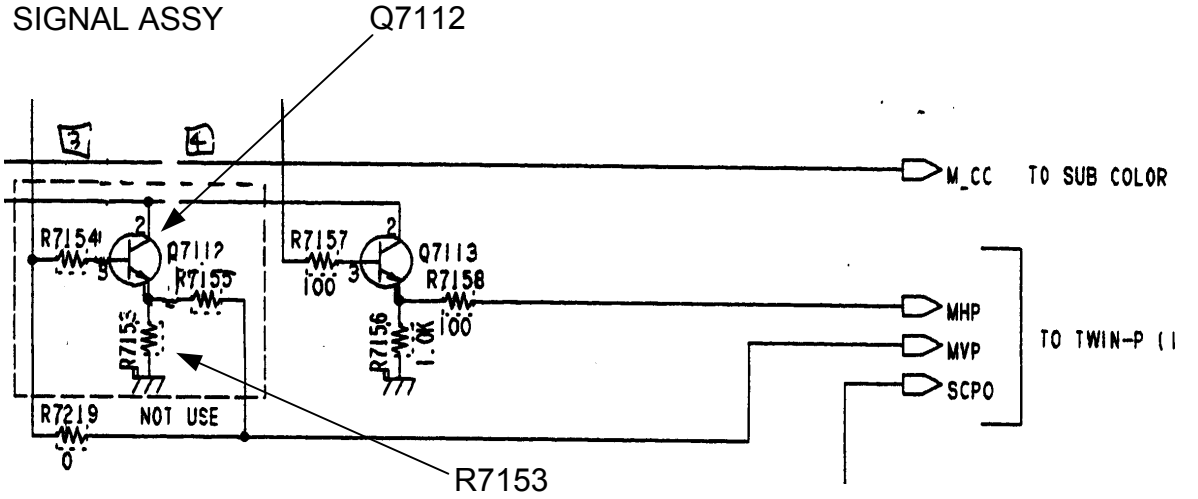

S/M P47

SIGNAL ASSY

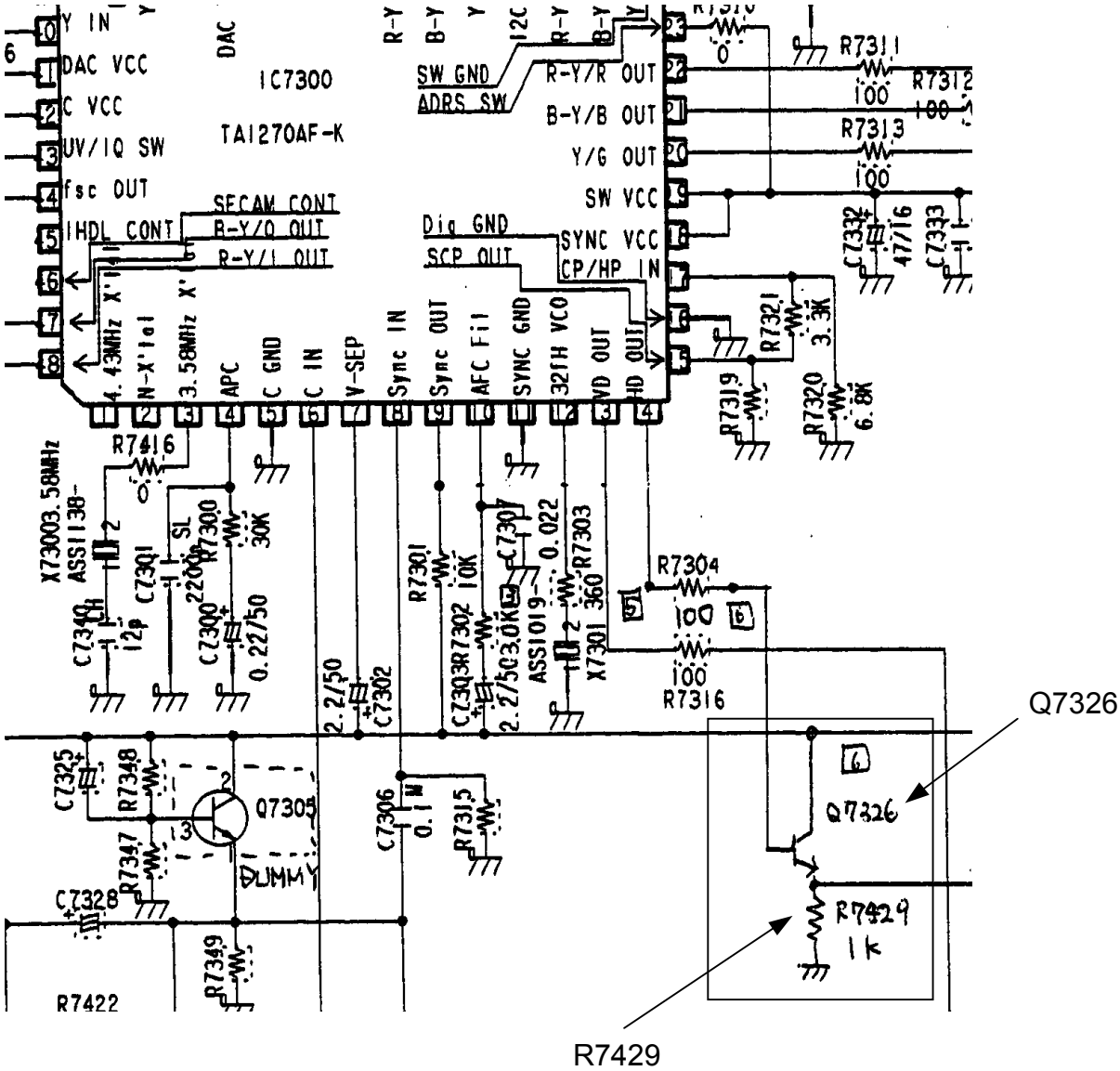

Pioneer

SERVICE INFORMATION

Date: May.18,2000 **No.:** **SI-D01003** **(1/1)**

MODEL No.	*	**SER.No.**	**S/M No.**	**PG**
PRO-510HD/KUXC/CA	A	R/C	ARP3047	78
PRO-610HD/KUXC/CA	A	R/C	ARP3047	78
PRO-710HD/KUXC/CA	A	R/C		

	#	**CHANGE**
DETAIL	1	Change of a resistor and addition of a capacitor in SUB VIDEO SERVICE ASSY

REASON	1	To prevent the horizontal noise in single screen mode.

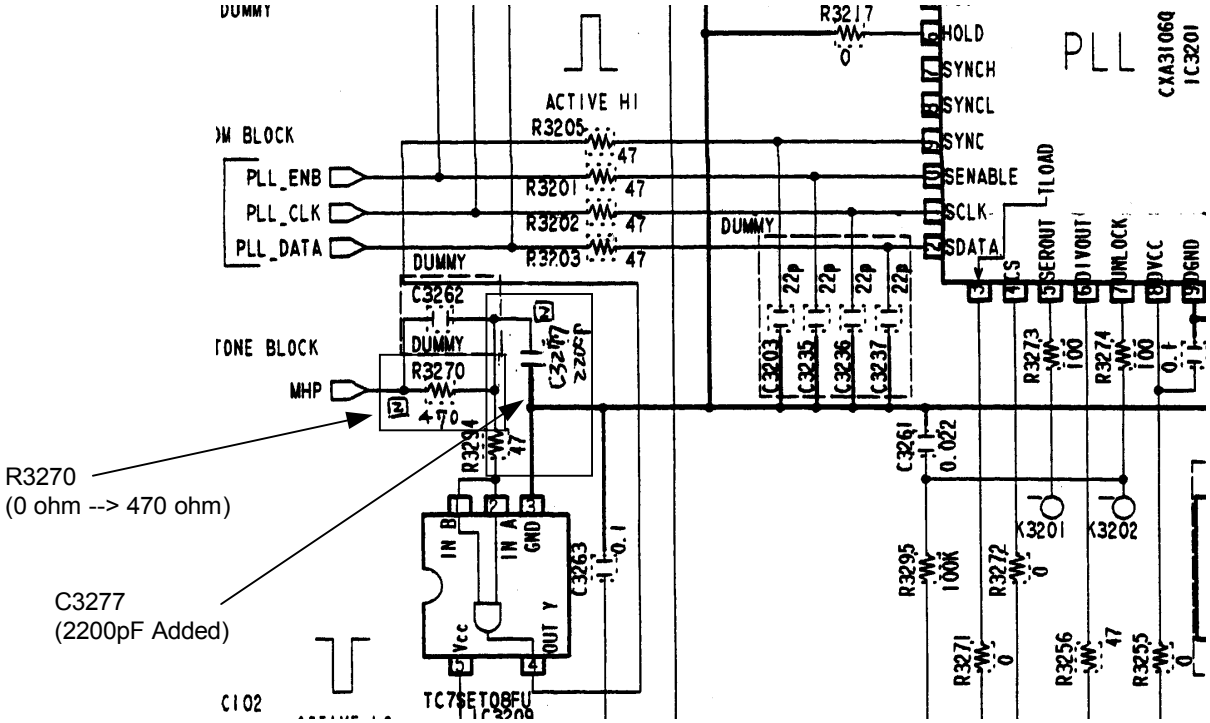

Ref		**CURRENT**	**PARTS**	**CO**	**NEW**	**PARTS**
*	#	**SYMBOL/DESCRIPTION**	**PART NUMBER**	**DE**	**PART NUMBER**	**SYMBOL/DESCRIPTION**
A	1	R3270	RS1/16S0R0J	2	RS1/16S471J	R3270
A	1		Added	-	CKSRYB222K50	C3277

PIONEER CORPORATION

Y.YAMAMOTO ,MANAGER

HE

Service Engineering Section

Service Division

NOTE:PARTS CODE
1;Changeable from old to new.
2:Not Interchangeable an all.
3:Interchangeable in both ways
5:Do not use old parts

Memo: EM, 9
SPC55-005
AA-D1962

Classify:

Pioneer

SERVICE INFORMATION

Date: May.15,2000 **No.:** **SI-D01002** **(1/1)**

MODEL No.	*	SER.No.	S/M No.	PG
PRO-510HD/KUXC/CA	A	R/C	ARP3047	106
PRO-610HD/KUXC/CA	A	R/C	ARP3047	106
PRO-710HD/KUXC/CA	A	R/C		
SD-532HD5/KBXC	A	R/C	ARP3047	106
SD-532HD5/KUXC/CA	A	R/C	ARP3047	106
SD-582HD5/KUXC/CA	A	R/C	ARP3047	106

	#	CHANGE
DETAIL	1	Change of VR602 in DEFLECTION SERVICE ASSY
REASON	1	To improve the reliability of High voltage adjustment

S/M Location:

DEFLECTION SERVICE ASSY
P106 C-4

Ref *	#	CURRENT SYMBOL/DESCRIPTION	PARTS PART NUMBER	CO DE	NEW PART NUMBER	PARTS SYMBOL/DESCRIPTION
A	1	VR602	VRTHS6VS223	2	VRTHS6VS473	VR602

PIONEER CORPORATION

Y.YAMAMOTO ,MANAGER
HE
Service Engineering Section
Service Division

NOTE:PARTS CODE
1;Changeable from old to new.
2:Not Interchangeable an all.
3:Interchangeable in both ways
5:Do not use old parts

Memo: EM, 70
SPC55-004
AA-D2008

Classify:

Pioneer

SERVICE INFORMATION

Date: Apr. 19, 2000 **No.:** **SI-D01001**

MODEL No.	*	SER.No.	S/M No.	PG
PRO-510HD/KUXC/CA	A	R/C	RRV3047	94
PRO-610HD/KUXC/CA	A	R/C	RRV3047	94
PRO-710HD/KUXC/CA	A	R/C		
SD-532HD5/KBXC	A	R/C	RRV3047	94
SD-532HD5/KUXC/CA	A	R/C	RRV3047	94
SD-582HD5/KUXC/CA	A	R/C	RRV3047	94

	#	CHANGE
DETAIL	1	Change of convergence micro-com in DIGITAL CONV. ASSY
	2	Addition of resistor to DIGITAL CONV. ASSY

REASON	1	Production convenience
	2	To improve convergence OSD display

DIGITAL CONV. ASSY

IC1652 Location: S/M P94 C-2,3

Ref *	#	CURRENT SYMBOL/DESCRIPTION	PARTS PART NUMBER	CO DE	NEW PART NUMBER	PARTS SYMBOL/DESCRIPTION
A	1	IC1652	PD5564B9	2	PD5564C9	IC1652
A	2		Added	-	RD1/4PU472J	R1737

PIONEER CORPORATION

,MANAGER

Service Engineering Section
Service Division

NOTE:PARTS CODE
1;Changeable from old to new.
2:Not Interchangeable an all.
3:Interchangeable in both ways
5:Do not use old parts

Memo: SPC54-431
AA-D1894

Classify:

CORRECTION OF SERVICE MANUAL

PIONEER
The Art of Entertainment

No.: SI-A49001
Date:May 30,1994

Please correct your service manua

MODEL [S/M NO.]	PAGE	INCORRECT	CORRECT
		The following part is available as spare parts.	
		No. / Part No. / Description	
SD-P404-K -P4043-K [ARP2080]	13	24 / ADE1091 / RF cable	
SD-P504-K -P504-Q [ARP2082]	14	25	
SD-P455-K -P4552-K -P4553-K -P4553-W [ARP2284]	10	21	
SD-P505-K -P505-Q -P5053-K -P5053-Q [ARP2285]	10	22	
SD-P4053-K [ARP2273]	13	21	
SD-P5005 [ARP2292]	10	25	
SD-P5553-K -P5553-Q [ARP2353]	13	94	
SD-P5065-K -P5065-Q -P4565-K -P4565-Q etc. [ARP2565]	13	233	

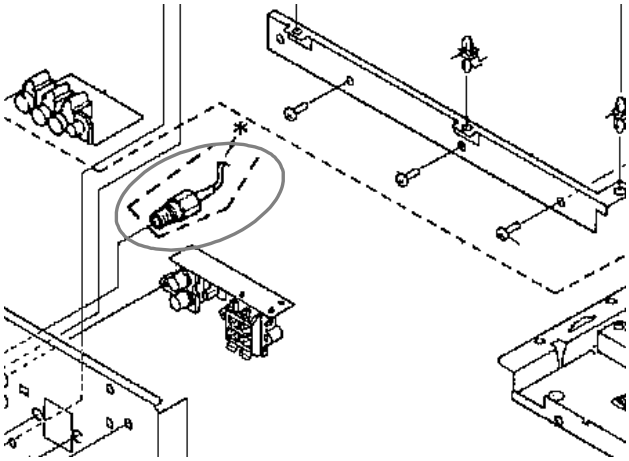

PIONEER ELECTRONIC CORPORATION (QP48-032,QP48-041 SMM-AN 106)

Issued by:

Y. IMAMIZU, MANAGER

HE Engineering Section
Service Dept.

MODEL [S/M NO.]	PAGE	INCORRECT	CORRECT
A-09 [ARP2858]	5	The following part is available as spare parts. No. Part No. Description 55 AKE-046 Earth terminal 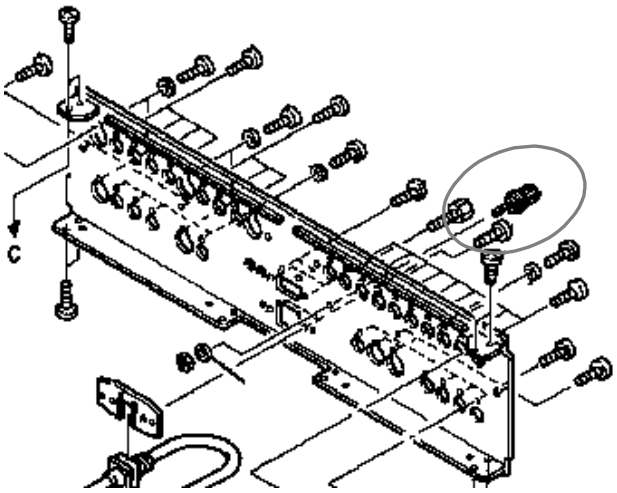 	

SERVICE INFORMATION

PIONEER
The Art of Entertainment

No. :SI-A48088-G
Date:APRIL 13,1994

MODEL NO.	*	SER. NO.	MODEL NO.	*	SER. NO.	MODEL NO.	*	SER. NO.
MA-99/SD	A	006601~						
MA-99/SL	A	000701~						

#	DETAIL OF CHANGE(S)		REASON FOR CHANGES
1	MODIFICATION OF GND PATTERN IN MAIN BOARD ASSY	X	TO REDUCE HUM NOISE IN SIGNAL LINE COMING FROM POWER SUPPLY LINE

SERVICE MANUAL
MODEL :MA-99
S/M NO.:TRT1055
PAGE :7

<PROBLEM> RESIDUAL NOISE LEVEL IS HIGH IN SIGNAL LINE.

<CAUSE> SINCE THE CAPACITOR(C98) OF POWER SUPPLY LINE IS GROUNDED TO THE GND OF SIGNAL LINE, HUM NOISE IS CREATED IN SIGNAL LINE DUE TO THE RIPPLE FROM POWER SUPPLY LINE.

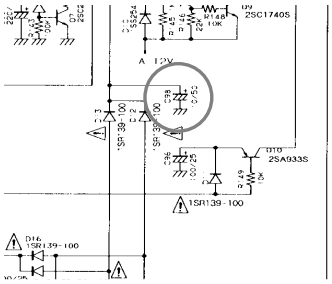

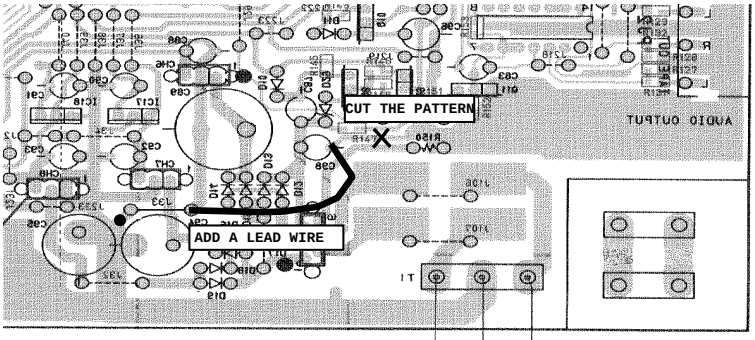

MAIN BOARD ASSY(MWX3029)

<COUNTERACTION IN FACTORY>

CUT THE GND PATTERN OF C98 ⊖ LEAD AS ABOVE.
ADD A LEAD WIRE TO CONNECT C98 ⊖ LEAD WITH J33(GND) AS ABOVE.

<SERVICE REMEDY>

SAME AS COUNTERACTION IN FACTORY

Ref. *	Ref. #	CURRENT PARTS SYMBOL/DESCRIPTION	CURRENT PARTS PART NUMBER	CODE	NEW PARTS PART NUMBER	NEW PARTS SYMBOL/DESCRIPTION

PIONEER ELECTRONIC CORPORATION

FA3Y017 TS 120

Issued by:

Y.IMAMIZU, MANAGER
HE Engineering Section
Service Dep.

Pioneer

SERVICE INFORMATION

Date: Jan. 17, 2001 **No.:** **SI-D01029** **(1/1)**

MODEL No.	*	SER.No.	S/M No.	PG
PDP-502MX/LUCBW/1	A	001281-	ARP3075	
PDP-502MXE/YVLDK/1	A	000741-	ARP3075	
PDP-505HD/KUC/1	A	000141-	ARP3080	

	#	CHANGE
DETAIL	1	Add the ferrite core (L0006,L0007)
REASON	1	To improve the picture noise

Ref *	#	CURRENT SYMBOL/DESCRIPTION	PARTS PART NUMBER	CODE	NEW PART NUMBER	PARTS SYMBOL/DESCRIPTION
A	1		Added	-	ATX1041	L0006,L0007

PIONEER CORPORATION

Y.YAMAMOTO ,MANAGER
HE
Service Engineering Section
Service Division

NOTE:PARTS CODE
1;Changeable from old to new.
2:Not Interchangeable an all.
3:Interchangeable in both ways
5:Do not use old parts

Memo: AA-D2424 KT, 9
SPC55-188
MTV01-083

Classify:

Pioneer

SERVICE INFORMATION

Date: Jan. 17, 2001 **No.:** **SI-D01028** **(1/1)**

MODEL No.	*	**SER.No.**	**S/M No.**	**PG**
PDP-505HD/KUC	A	R/C		

	#	**CHANGE**
DETAIL	1	Change the parts in DIGITAL Assy.
REASON	1	To prevent the character from changing.

Please refer to ARP3044

IC2257; page 13

C2281-C2284; page 14

C2259-C2262; page 3

Ref *	#	**CURRENT SYMBOL/DESCRIPTION**	**PARTS PART NUMBER**	**CO DE**	**NEW PART NUMBER**	**PARTS SYMBOL/DESCRIPTION**
A	1	IC2257	TC74VHCT541AFT	2	TC74VHC541FT	IC2257
A	1	C2281,C2282, C2283,C2284	CCSQCH221J50	2	CKSQYB222K50	C2281,C2282, C2283,C2284
A	1	C2259,C2260, C2261,C2262,	CCSRCH220J50		CKSQYB152K50	C2259,C2260, C2261,C2262,

PIONEER CORPORATION

Y.YAMAMOTO ,MANAGER
HE
Service Engineering Section
Service Division

NOTE:PARTS CODE
1;Changeable from old to new.
2:Not Interchangeable an all.
3:Interchangeable in both ways
5:Do not use old parts

Memo: AA-D2531 KT, 9
SPC55-332

Classify:

Pioneer

SERVICE INFORMATION

Date: Jan. 17, 2001 **No.:** **SI-D01027** **(1/1)**

MODEL No.	*	**SER.No.**	**S/M No.**	**PG**
PDU-50WX1/TUCYV	A	R/C	ARP3072	6,7

	#	**CHANGE**
DETAIL	1	Change and add the parts.

REASON	1	To change the thickness of PROTECT PANEL Assy. (To improve the performance.)

Protect Panel Assy (AMR3162) Front View

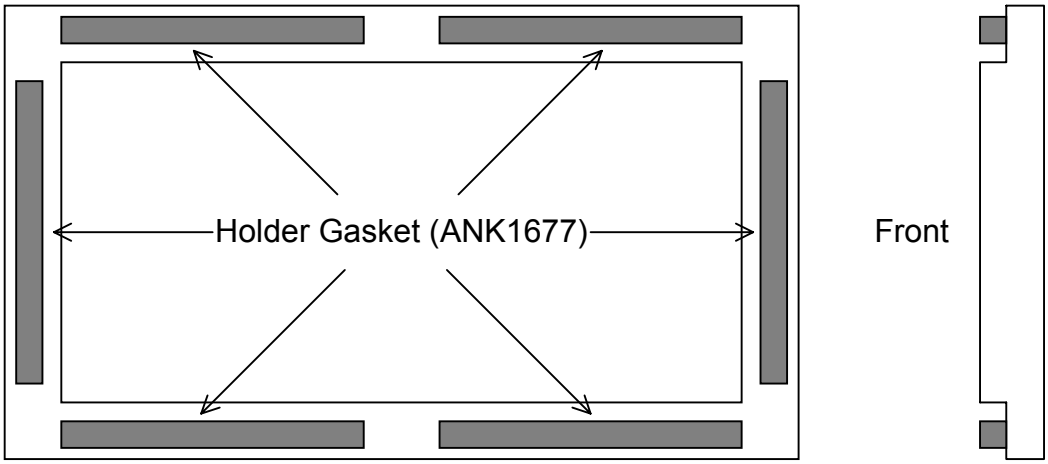

Protect Panel Assy (AMR3162) Side View

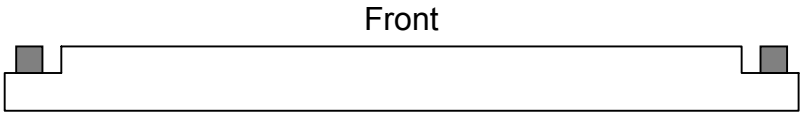

Ref		**CURRENT**	**PARTS**	**CO**	**NEW**	**PARTS**
*	#	**SYMBOL/DESCRIPTION**	**PART NUMBER**	**DE**	**PART NUMBER**	**SYMBOL/DESCRIPTION**
A	1	Protect Panel Assy	AMR3162	2	AMR3230	Protect Panel Assy
A	1		Added	-	ANK1677	Holder Gasket

PIONEER CORPORATION

Y.YAMAMOTO ,MANAGER
HE

Service Engineering Section
Service Division

NOTE:PARTS CODE
1;Changeable from old to new.
2:Not Interchangeable an all.
3:Interchangeable in both ways
5:Do not use old parts

Memo: AA-D2502 KT, 70
SPC55-313

Classify:

Pioneer

SERVICE INFORMATION

Date: Mar. 13,2001 **No.:** **SI-D01026** **(1/1)**

MODEL No.	*	SER.No.	S/M No.	PG
PDP-V400/LU/CA	A	Running Change	ARP2954	80
PDP-V401/LU/CA	A	Running Change	ARP2981	80
PDP-V402/LUBW/CA	A	Running Change	ARP3034	100
PDP-V402/LUBW/CA/1	A	Running Change	ARP3081	78
PDP-V402/LUCBW	A	Running Change	ARP3034	100

	#	CHANGE
DETAIL	1	Change of resistors in MAIN POWER ASSY
REASON	1	To improve performance

Ref *	#	CURRENT SYMBOL/DESCRIPTION	PARTS PART NUMBER	CO DE	NEW PART NUMBER	PARTS SYMBOL/DESCRIPTION
A	1	R3107	RD1/2PM473J	-	RS1LMF153J	R3107
A	1	R3108	RD1/2PM563J	-	RS1LMF153J	R3108

PIONEER CORPORATION

M.EGASHIRA ,MANAGER
BS
Service Engineering Section
Service Division

NOTE:PARTS CODE
1;Changeable from old to new.
2:Not Interchangeable an all.
3:Interchangeable in both ways
5:Do not use old parts

Memo: SPC55-299
AA-D2507

Classify: NM-70

Pioneer

SERVICE INFORMATION

Date: Mar.19,2001 **No.:** **SI-D01025** **(1/1)**

MODEL No.	*****	**SER.No.**	**S/M No.**	**PG**
PDP-V402EA/YVLDK	A	Running Change	ARP3076	13 22

	#	**CHANGE**
DETAIL	1	Addition of Ferrite Core
	2	Change from Wire Saddle to Ferrite Core Holder

REASON 1,2 To improve the performance

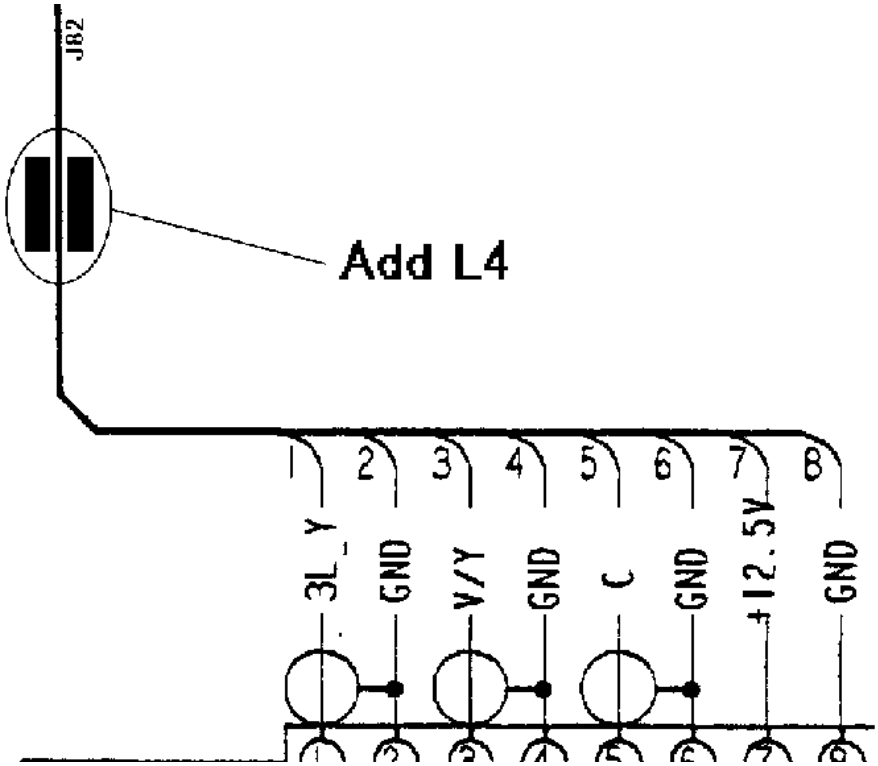

Ref		**CURRENT**	**PARTS**	**CO**	**NEW**	**PARTS**
*****	**#**	**SYMBOL/DESCRIPTION**	**PART NUMBER**	**DE**	**PART NUMBER**	**SYMBOL/DESCRIPTION**
A	1		Added	-	ATX1037	L4
A	2	Wire Saddle	AEC1745	1	AEC1818	Ferrite Core Holder

PIONEER CORPORATION

M.EGASHIRA ,MANAGER
BS
Service Engineering Section
Service Division

NOTE:PARTS CODE
1;Changeable from old to new.
2:Not Interchangeable an all.
3:Interchangeable in both ways
5:Do not use old parts

Memo: SPC55-271
AA-D2501

Classify: NM-70

Pioneer

SERVICE INFORMATION

Date: Apr.6, 2001	**No.:**	**SI-D01024A-G**		**(1/2)**

MODEL No.	*	**SER.No.**	**S/M No.**	**PG**
PDP-V402/LUBW/CA/1		ALL		

	#	**DETAIL**
SYMPTOM		PDP repeats on and off in the state that a rear fan is not connected.
CAUSE		In Main Power Assy (ARW1077), noises enter into the Power ON/OFF signal coming from Microcomputer, and it causes malfunction.
SERVICE REMEDY		Remove the cathodic side of D3802, and add another diode (HSS104-02) to D3802 in series in Main Power Assy (AWR1077). *Please refer to Figure 1.
FACTORY COUNTER -MEASURE		Same as Service Remedy

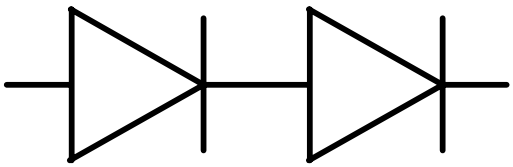

D3802 **HSS104-02 (New added diode)**

Please discard the previous Service Information, SI-D01024-G, dated on Mar. 9, 2001

Ref		**CURRENT**	**PARTS**	**CO**	**NEW**	**PARTS**
*	#	**SYMBOL/DESCRIPTION**	**PART NUMBER**	**DE**	**PART NUMBER**	**SYMBOL/DESCRIPTION**

PIONEER SERVICE NETWORK CORPORATION

M.EGASHIRA ,MANAGER

BS Service Administration Group
BS Service Division

NOTE:PARTS CODE
1:Changeable from old to new.
2:Not Interchangeable an all.
3:Interchangeable in both ways
5:Do not use old parts

Memo: MTV01- 075

Classify: NM-7

MAIN POWER ASSY (AWR1077) PART'S VIEW

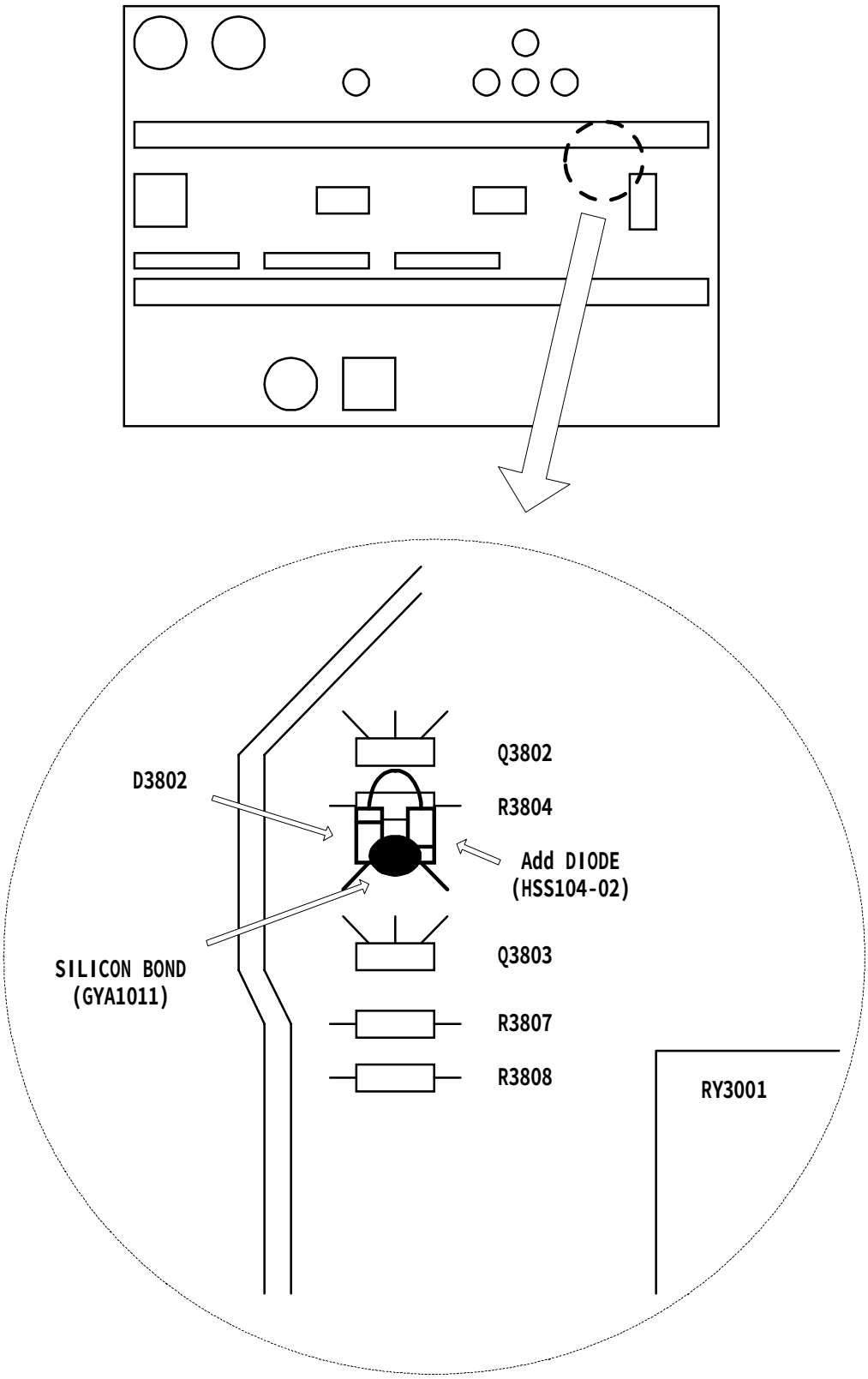

Pioneer

SERVICE INFORMATION

Date: Jan 26, 2001 **No.:** **SI-D01023-G** **(1/1)**

MODEL No.	*	**SER.No.**	**S/M No.**	**PG**
PDP-V402EA/YVLDK	A	1541-		

	#	**DETAIL**
SYMPTOM	1	Only when the incoming signal is PAL, Synchronism sometimes; two or three times during 30 minutes, falls into disorder in a moment.
CAUSE	1	Noise is easy to obstruct the wave at the beginning due to the heavy load on the communication line in u-com.
SERVICE REMEDY		Please change R7174 and R7175, from 8.2kohm to 2.7kohm.
FACTORY COUNTER -MEASURE		Same as the service remedy

Ref *	#	**CURRENT SYMBOL/DESCRIPTION**	**PARTS PART NUMBER**	**CO DE**	**NEW PART NUMBER**	**PARTS SYMBOL/DESCRIPTION**
A	1	R7174, R7175	RS1/16S822J		RS1/16S272J	R7174, R7175

PIONEER SERVICE NETWORK CORPORATION

M.EGASHIRA ,MANAGER

BS Service Administration Group
BS Service Division

NOTE:PARTS CODE
1:Changeable from old to new.
2:Not Interchangeable an all.
3:Interchangeable in both ways
5:Do not use old parts

Memo: MTV01-080
SPC55-333
AA-D3013

Classify: NM-6

Pioneer

SERVICE INFORMATION

Date: Aug.7,2001	**No.:**	**SI-D01023A-G**		**(1/1)**

MODEL No.	*****	**SER.No.**	**S/M No.**	**PG**
PDP-V402EA/YVLDK	A	1541-		

	#	DETAIL
SYMPTOM	1	Only when the incoming signal is PAL, Synchronism sometimes; two or three times during 30 minutes, falls into disorder in a moment.
CAUSE	1	Noise is easy to obstruct the wave at the beginning due to the heavy load on the communication line in u-com.
SERVICE REMEDY		Please change R7174 and R7175, from 8.2kohm to 2.7kohm.
FACTORY COUNTER -MEASURE		Same as the service remedy

Ref *	#	CURRENT SYMBOL/DESCRIPTION	PARTS PART NUMBER	CODE	NEW PART NUMBER	PARTS SYMBOL/DESCRIPTION
A	1	R7174, R7175	RS1/16S822J	-	RS1/16S272J	R7174, R7175

PIONEER SERVICE NETWORK CORPORATION

M.EGASHIRA ,MANAGER

BS Service Administration Group
BS Service Division

NOTE:PARTS CODE
1:Changeable from old to new.
2:Not Interchangeable an all.
3:Interchangeable in both ways
5:Do not use old parts

Memo: MTV01-080
SPC55-333
AA-D3013

Classify: NM-6

Pioneer

CORRECTION OF SERVICE MANUAL

Date: Jun. 7, 2001 **No.:** **SI-D01022** **(1/1)**

MODEL No.	S/M No.	PG	MODEL No.	S/M No.	PG
PDP-502MX/LUCBW	ARP3037	42	PDP-502MXE/YVLDK	ARP3037	42

Please correct your service manual

6. ADJUSTMENT

■ SERVICE FACTORY MODE

<lower figure>

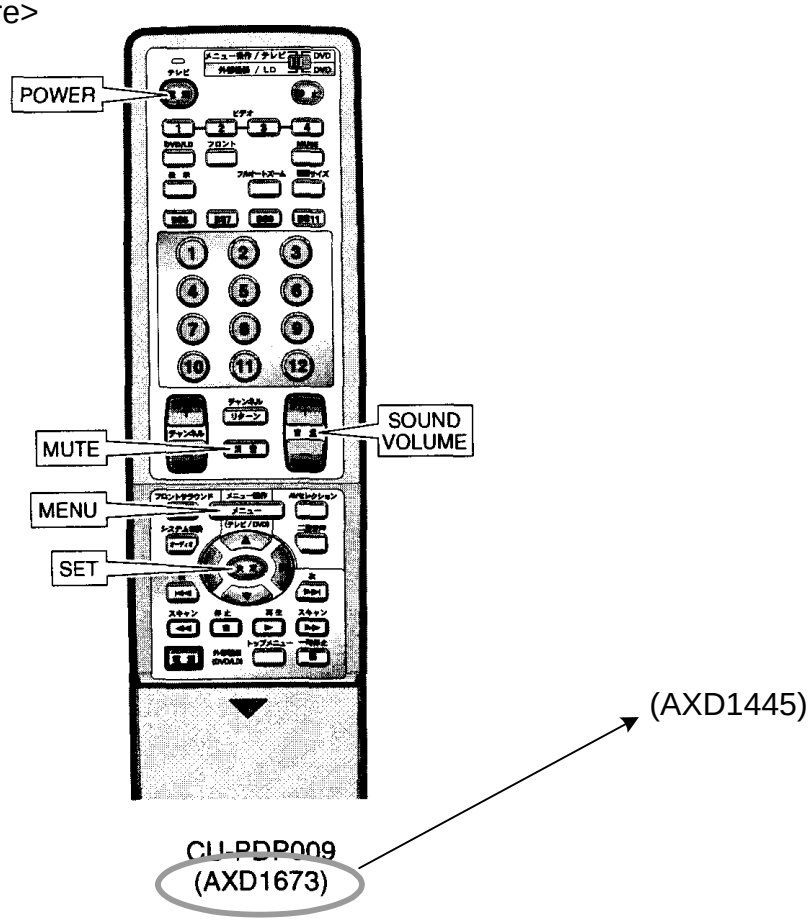

PIONEER CORPORATION

Memo: AN 70

K.NOHARA ,MANAGER
HE
Service Engineering Section
Service Division

Pioneer

SERVICE INFORMATION

Date: Dec.19 ,2000 **No.:** **SI-D01021-G** **(1/3)**

MODEL No.	*	**SER.No.**	**S/M No.**	**PG**
PRO-700HD/KUXC/CA	A	---	ARP3013	
SD-641HD5/KUXC/CA	B	---	ARP3031	
64LHP5000 (for SHARP)	C	---		
64LHP4000 (for SHARP)	D	---		

	#	**DETAIL**
SYMPTOM	1	Screen distorts due to out of synchronization when changing input video from NTSC images (15.7kHz) to progressive images (31.5kHz).
CAUSE	1	Input signal frequency cannot be discriminated on PTV.
SERVICE REMEDY	1	Please refer to page 2 and 3.
FACTORY COUNTER -MEASURE		Service remedy only There will be no more production for this model.

Please refer to the following pages.

Note:
When picture is disturbed, select the other function and reselect the function that is connecting to DVD and then it operates normally.

Ref		**CURRENT**	**PARTS**	**CO**	**NEW**	**PARTS**
*	#	**SYMBOL/DESCRIPTION**	**PART NUMBER**	**DE**	**PART NUMBER**	**SYMBOL/DESCRIPTION**
A	1	Tuner u-com Assy	AWV1715		AWV1881	Tuner u-com Assy
A	1	Tuner u-com Assy	AWV1744		AWV1881	Tuner u-com Assy
B	1	Tuner u-com Assy	AWV1762		AWV1884	Tuner u-com Assy
C	1	Tuner u-com Assy	AWV1723		AWV1882	Tuner u-com Assy
	1	Tuner u-com Assy	AWV1755		AWV1883	Tuner u-com Assy
AC	1	IC2202	PD5463C, C9		PD5463D9	IC2202
AD	1	IC2202	PD5463B		PD5463D9	IC2202
B	1	IC2202	PD5542A		PD5542B9	IC2202
A	1	Sub video Assy	AWV1718		AWV1745	Sub video Assy
C	1	Sub video Assy	AWV1726		AWV1745	Sub video Assy

PIONEER CORPORATION

Y.YAMAMOTO ,MANAGER
HE
Service Engineering Section
Service Division

NOTE:PARTS CODE
1:Changeable from old to new.
2:Not Interchangeable an all.
3:Interchangeable in both ways
5:Do not use old parts

Memo:

Classify:

AN 69

<Service remedy>

For Tuner u-com Assy:

Replace IC2202 with new one in accordance with the following list, and delete C2202. Location of this IC and capacitor is as illustrated below. (There are 2 kinds of new IC.)

Old and New one for Tuner u-com assy,

	OLD		→	NEW	
	ASSY	sub u-com IC		ASSY	sub u-com IC
PRO-700HD	AWV1715	PD5463C(9)		AWV1881	PD5463D9
	AWV1744	PD5463B		AWV1881	PD5463D9
SD-641HD5	AWV1762	PD5542A		AWV1884	PD5542B9
64LHP5000	AWV1723	PD5463C		AWV1882	PD5463D9
64LHP4000	AWV1755	PD5463B		AWV1883	PD5463D9

Notes:
In case new Assy is available, it is possible for you to replace old Assy with new Assy. New Assy is basically the same as old Assy except for the IC replaced and capacitor deleted.

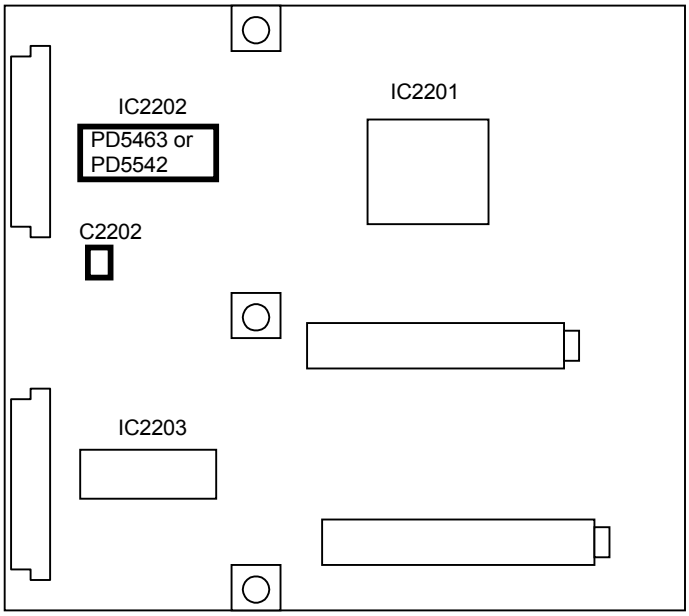

Tuner u-com Assy (parts mount side)

For Sub Video Assy:

* Remove the shield case
For PRO-700HD (Serial 1 - 1541) and 64LHP5000 (Serial 1 - 280), cut 2 pattern lines and add a jumper line as illustrated below:
For others models or other serial number product, modification is not necessary on this sub-video Assy.

	Serial No.	OLD	MEASURE	NEW
PRO-700HD	1-1541 1542-	AWV1718 AWV1745	necessary non	AWV1745
SD-641HD5	ALL	AWV1745	non	
64LHP5000 64LHP4000	1-280 281- ALL	AWV1726-A AWV1726-B AWV1745	necessary non non	

Notes:
In case new Assy is available, it is possible for you to replace old Assy with new Assy. New Assy is basically the same as old Assy except for the above patterns and jumper cable. As to jumper cable, please use normal type and put it on the board as illustrated.

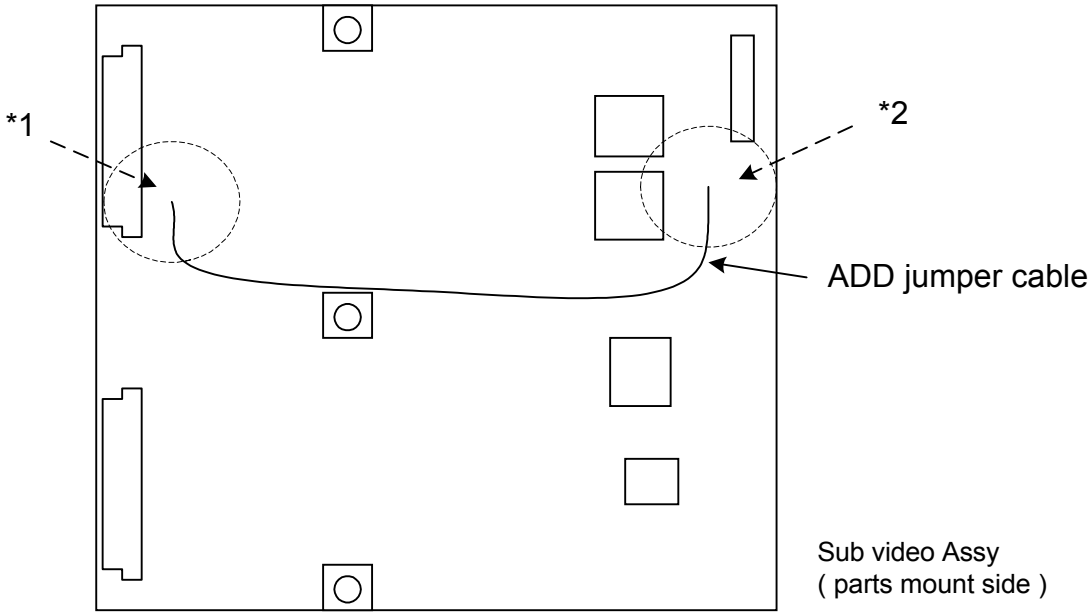

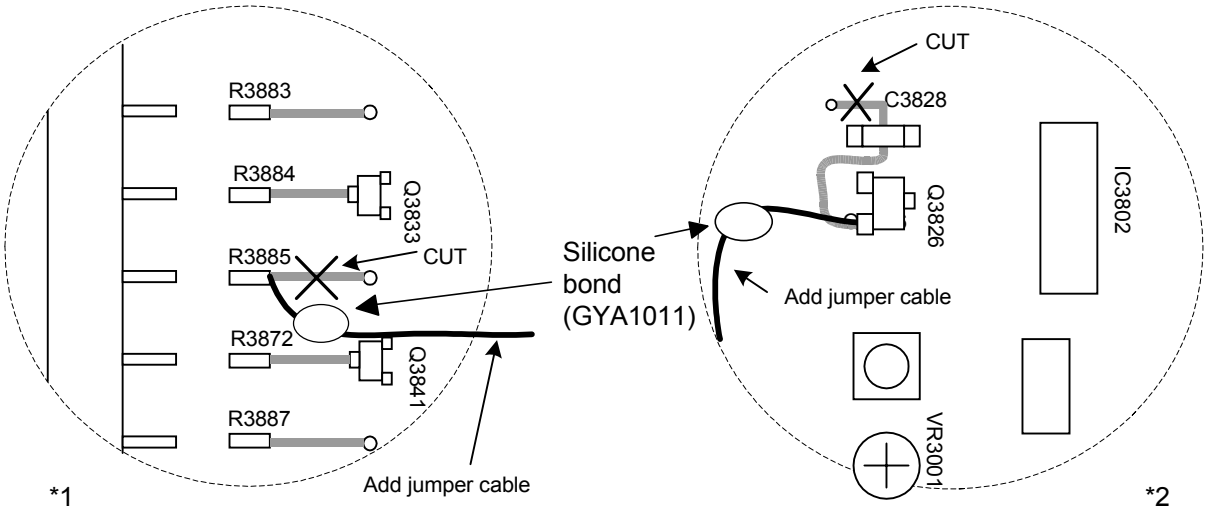

Pioneer

SERVICE INFORMATION

Date: Dec.25, 2000 **No.:** **SI-D01020-G** **(1/1)**

MODEL No.	*	**SER.No.**	**S/M No.**	**PG**
PDP-502MXE/YVLDK/1	A	----		

	#	**DETAIL**
SYMPTOM	1	When the picture size is zoom mode, the picture darkens because still picture detection works even if the moving picture is displayed.
CAUSE	1	Microcomputer bug.
SERVICE REMEDY	1	Change the U-COM Assy (AWZ6520) under the below serial numbers.
FACTORY COUNTER -MEASURE		Service remedy only

Applicable Serial No.

PDP-502MXE/YVLDK/1 : Q'ty 26

UJSS001932WQ	UJSS002055WQ	UJSS002511WQ	UJSS002519WQ
UJSS002005WQ	UJSS002056WQ	UJSS002512WQ	UJSS002520WQ
UJSS002008WQ	UJSS002057WQ	UJSS002513WQ	
UJSS002009WQ	UJSS002058WQ	UJSS002514WQ	
UJSS002010WQ	UJSS002061WQ	UJSS002515WQ	
UJSS002012WQ	UJSS002508WQ	UJSS002516WQ	
UJSS002013WQ	UJSS002509WQ	UJSS002517WQ	
UJSS002052WQ	UJSS002510WQ	UJSS002518WQ	

NOTE: U-COM Assy's part number does not changed. The stock parts in WPC have modified.

Ref		**CURRENT**	**PARTS**	**CO**	**NEW**	**PARTS**
*	#	**SYMBOL/DESCRIPTION**	**PART NUMBER**	**DE**	**PART NUMBER**	**SYMBOL/DESCRIPTION**

PIONEER CORPORATION

Y.YAMAMOTO ,MANAGER
HE
Service Engineering Section
Service Division

NOTE:PARTS CODE
1:Changeable from old to new.
2:Not Interchangeable an all.
3:Interchangeable in both ways
5:Do not use old parts

Memo: MTV01-067 AN 70

Classify:

Pioneer

SERVICE INFORMATION

Date: Jan 25, 2001 **No.:** **SI-D01019-G** **(1/1)**

MODEL No.	*	**SER.No.**	**S/M No.**	**PG**
PDP-V401/LU/CA		ALL		
PDP-V401E/WYVLD		ALL		

	#	**DETAIL**
SYMPTOM	*	A picture turns yellow / A cell defect appears at a part of a panel after 20,000 hours used.
CAUSE	*	A radiative characteristic of a cell is reduced by Long Term Panel Drive. This happens only on a panel of the first generation.
SERVICE REMEDY	*	Adjust Vofs from 140V to 150V.
	*	Adjust the voltage of VR3601 between TP3601 and TP3602 in Main Power Assy; AWR1077.
FACTORY COUNTER -MEASURE	*	Only Service Remedy

Ref		**CURRENT**	**PARTS**	**CO**	**NEW**	**PARTS**
*	#	**SYMBOL/DESCRIPTION**	**PART NUMBER**	**DE**	**PART NUMBER**	**SYMBOL/DESCRIPTION**

PIONEER SERVICE NETWORK CORPORATION

M.EGASHIRA ,MANAGER

BS Service Administration Group
BS Service Division

NOTE:PARTS CODE
1:Changeable from old to new.
2:Not Interchangeable an all.
3:Interchangeable in both ways
5:Do not use old parts

Memo: MTV01-062

Classify: NM-70

Pioneer

SERVICE INFORMATION

Date: Jan.11, 2001 **No.:** **SI-D01017** **(1/1)**

MODEL No.	*	SER.No.	S/M No.	PG
PDP-V501X/KUC	A	ALL	ARP2997	
PDP-501MX/KUC	A	ALL	ARP2997	
PDP-501MX/TYVL	A	ALL	ARP3011	
PDP-501MX/TB	A	ALL	ARP3012	

	#	CHANGE
DETAIL	1	When one of the following FET in Y DRIVE A Assy(AWZ6321) or Y DRIVE B Assy (AWZ6322) have to be changed, pair FET should be replaced with new part at the same time.
REASON	1	When one of FET is defective, the other is also damaged.

Q3005(FS14UM)
Q3006(2SK2255) PAIR

Q3011(FS14UM)
Q3012(2SK2255) PAIR

* Parts Number is not changed.

Please be sure to replace pair parts.
Otherwise the product is out of order because the other part is also damaged.

Ref *	#	CURRENT SYMBOL/DESCRIPTION	PARTS PART NUMBER	CO DE	NEW PART NUMBER	PARTS SYMBOL/DESCRIPTION

PIONEER CORPORATION

Y.YAMAMOTO ,MANAGER
HE
Service Engineering Section
Service Division

NOTE:PARTS CODE
1;Changeable from old to new.
2:Not Interchangeable an all.
3:Interchangeable in both ways
5:Do not use old parts

Memo: MTV01-060 KT, 70

Classify:

Pioneer

SERVICE INFORMATION

Date: Dec.15,2000 **No.:** **SI-D01016-G** **(1/2)**

MODEL No. * **SER.No.** **S/M No.** **PG**

See to following page

	#	DETAIL
SYMPTOM	1	The peripheral of PDP is affected by PDP(ex. the sound of radio becomes noisy, the slant striped noise appears on the picture of TV etc.).
	2	The sub field noise (sland striped noise) appears on the picture of PDP.
CAUSE	1.2	Increase of radiation. It may occurs the above symptom if the shield gusket is not right place when removing rear panel.
SERVICE REMEDY	1.2	Before set the rear panel, check the position of shield guscket.
FACTORY COUNTER -MEASURE		Only service remedy.

Ref *	#	CURRENT SYMBOL/DESCRIPTION	PARTS PART NUMBER	CO DE	NEW PART NUMBER	PARTS SYMBOL/DESCRIPTION

PIONEER SERVICE NETWORK CORPORATION

NOTE:PARTS CODE

1:Changeable from old to new.
2:Not Interchangeable an all.
3:Interchangeable in both ways
5:Do not use old parts

Memo: MTV01-053

M.EGASHIRA ,MANAGER

BS Service Administration Group
BS Service Division

Classify:

MODEL No.	*	SER.No.	S/M No.	PG
PDP-V400/LU/CA	A	ALL		
PDP-V400E/WYO	A	ALL		
PDP-V401/LU/CA	A	ALL		
PDP-V401E/WYVLD	A	ALL		
PDP-V402/LUBW/CA	A	ALL		
PDP-V402E/WYVLDK	A	ALL		

Pioneer

SERVICE INFORMATION

Date: Dec.13,2000 **No.:** **SI-D01015-G** **(1/2)**

MODEL No. * **SER.No.** **S/M No.** **PG**

See to following page

	#	DETAIL
SYMPTOM	A	Subfield noise (diagonal pattern noise is on a picture)
CAUSE	A	Drive noise comes into the small level signal lines.
SERVICE REMEDY		Change of a screw from PMB30P080FZK to ABA1283.
FACTORY COUNTER -MEASURE		Same as the service remedy.

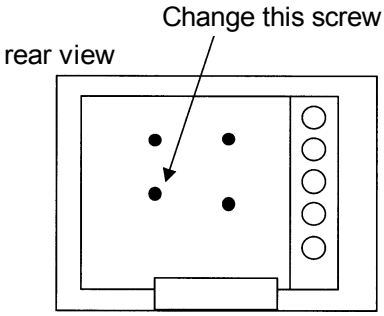

Ref *	#	CURRENT SYMBOL/DESCRIPTION	PARTS PART NUMBER	CO DE	NEW PART NUMBER	PARTS SYMBOL/DESCRIPTION

PIONEER SERVICE NETWORK CORPORATION

NOTE:PARTS CODE

1:Changeable from old to new.
2:Not Interchangeable an all.
3:Interchangeable in both ways
5:Do not use old parts

Memo: MTV01-052

T. Nakagawa **,MANAGER**

DP Technical Service **Support Group** **Support Division**

Classify:

MODEL No.	*	SER.No.	S/M No.	PG
PDP-V400/LU/CA	A			
PDP-V400E/WYO	A			
PDP-V401/LU/CA	A			
PDP-V401E/WYVLD	A			
PDP-V402/LUBW/CA	A			
PDP-V402E/WYVLDK	A			

Pioneer

SERVICE INFORMATION

Date: Nov.27,2000 **No.:** **SI-D01014-G** **(1/2)**

MODEL No.	*	**SER.No.**	**S/M No.**	**PG**
PDP-502MX/LUCBW	A	ALL		
PDP-502MXE/YVLDK	B	ALL		
PDP-505HD/KUC	C	ALL		

	#	**DETAIL**
SYMPTOM	1	Picture sometimes mutes or freezes, horizontal short line noise appears. Power Down
CAUSE	1	Poor contact of the connection between analog video and digital video assy. In S/M: A33(CN2901)-D20(CN3403),A34(CN2902)-D21(CN3404)
SERVICE REMEDY	1	Correspond analog video kit according to the table below.
FACTORY COUNTER -MEASURE		Service Remedy only

		changed block	1	2	3	4	5	6
PDP-502MX		serial No.	1-300	300-750	751-2900	2901-3656	3657-4285	4286-
analog(mother)			AWV1769	<--	<--	<--	<--	AWV1832
analog(separated)			AWZ6441	<--	<--	<--	<--	AWZ6487
PDP-502MXE		serial No.	1-50	51-900	901-3225	3226-3599	3600-4625	4626-
analog(mother)			AWV1790	<--	<--	<--	<--	AWV1833
analog(separated)			AWZ6448	<--	<--	<--	<--	AWZ6488
PDP-505HD		serial No.	1-150	-	151-950	951-1250	1251-1634	1635-
analog(mother)			AWV1769	<--	<--	<--	<--	AWV1836
analog(separated)			AWZ6441	<--	<--	<--	<--	AWZ6490
All Models								
digital			AWV1815	<--	<--	<--	<--	AWV1838
PDP-502MX	Service	When analog video is changed	GXX1182	GXX1182	GXX1182	GXX1182(refer to 2/2 NOTE1)		AWV1832(AWZ6487)
	Remedy	When digital video is changed	AWV1815	AWV1815	AWV1815	AWV1815		AWV1838
PDP-502MXE	Service	When analog video is changed	GXX1183	GXX1183	GXX1183	GXX1183(refer to 2/2 NOTE1)		AWV1833(AWZ6488)
	Remedy	When digital video is changed	AWV1815	AWV1815	AWV1815	AWV1815		AWV1838
PDP-505HD	Service	When analog video is changed	GXX1185	GXX1185	GXX1185	GXX1185(refer to 2/2 NOTE1)		AWV1836(AWZ6490)
	Remedy	When digital video is changed	AWV1815	AWV1815	AWV1815	AWV1815		AWV1838

Ref *	#	**CURRENT SYMBOL/DESCRIPTION**	**PARTS PART NUMBER**	**CO DE**	**NEW PART NUMBER**	**PARTS SYMBOL/DESCRIPTION**
A	1		Add	-	GXX1182	Analog Video Kit
B	1		Add	-	GXX1183	Analog Video Kit
C	1		Add	-	GXX1185	Analog Video Kit

PIONEER CORPORATION

Y.YAMAMOTO ,MANAGER
HE
Service Engineering Section
Service Division

NOTE:PARTS CODE
1:Changeable from old to new.
2:Not Interchangeable an all.
3:Interchangeable in both ways
5:Do not use old parts

Memo: MTV01-046 AN 69

Classify:

< NOTE1 >

Changed point in serial block "4" and "5" have two kind of digital video Assy with different position of resistors.
Correspond according to following when coaxial cable is changed.

/ Coaxial cables are used by following combination according to connecting digital video.
/ Remove resistors of R3475,R3476,R3477 and place them at location of R3405,R3407,R3408 when it is necessary.

combination of Assy and connectors : ANP1931/1932 are part number of substrate.

analog video (ANP1931)	digital video AWV1815(ANP1932)		
	A-F	G(R3475,3476,3477)	G(R3405,3407,3408)
suffix A-F	no change (ADE1175/1182)	exchange resistors	ADE1182(2pcs)
suffix G	ADE1180(2pcs)	no change (ADE1181(2pcs)+ADX2577)	no change (ADE1181/1180)

R3405,3407,3408,3475,3476,3477 are same all resistor(10 ohms)

/ position of R3475,3476,3477 and R3405,3407,3408 (fig,1)

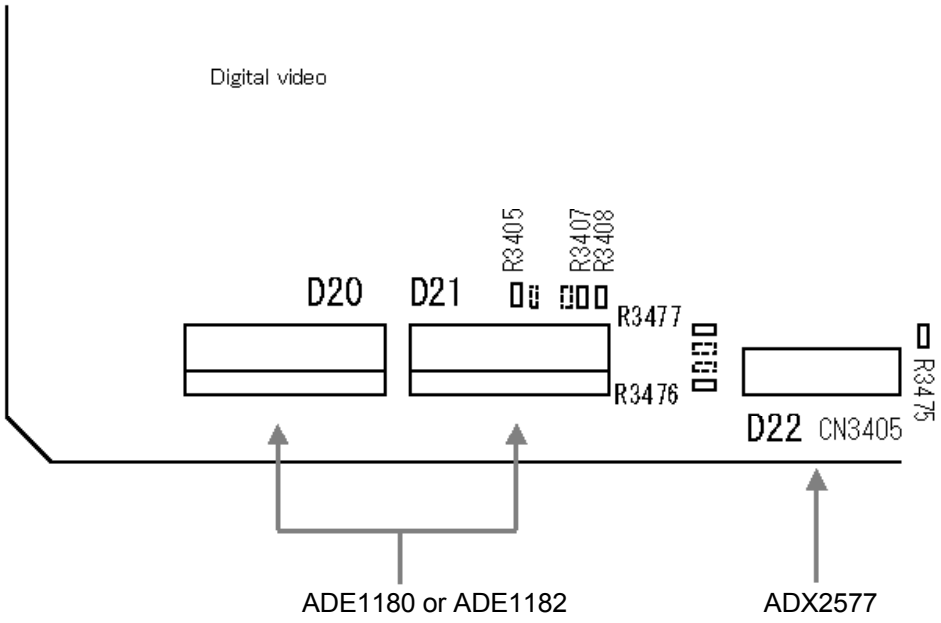

combination list of analog video kit

analog video \ cable		ADE1180(2pcs)
PDP-502MX/LUCBW	AWZ6441(ANP1931-A-F)	GXX1182
PDP-502MXE/YVLDK	AWZ6448(ANP1931-G)	GXX1182
PDP-505HD/KUC	AWZ6450(ANP1931-G)	GXX1182

Pioneer

SERVICE INFORMATION

Date: Oct. 5, 2000 **No.:** **SI-D01013-G** **(1/1)**

MODEL No.	*	**SER.No.**	**S/M No.**	**PG**
PDP-V402/LUBW/CA	A	- 875		
PDP-V402E/WYVLDK	A	-1100		

	#	**DETAIL**
SYMPTOM	1	POWER DOWN
CAUSE	1	Scan module is damaged by over -current in Y DRIVE ASSY.
SERVICE REMEDY	1	- Delete R5047 (RS1/10S301J). - Solder R5047 (RD1/4PU560J) and D5035 (HZS2BLL). - Apply silicone bond (GYA1011) to the soldered.
FACTORY COUNTER -MEASURE	1	Same as the service remedy.

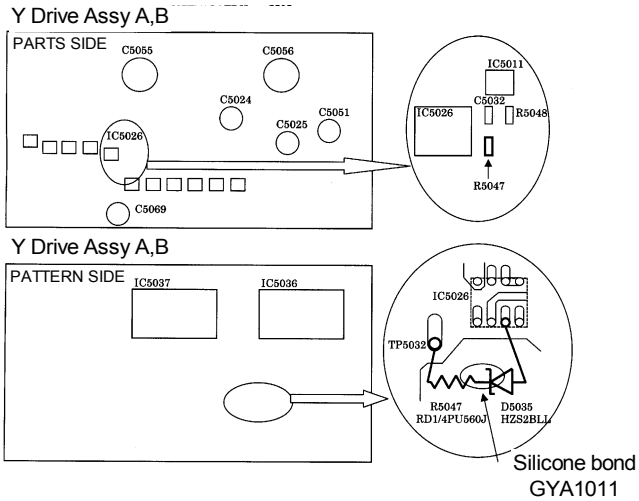

Ref *	#	**CURRENT SYMBOL/DESCRIPTION**	**PARTS PART NUMBER**	**CO DE**	**NEW PART NUMBER**	**PARTS SYMBOL/DESCRIPTION**
A	1	R5047	RS1/10S301J	2	RD1/4PU560J	R5047
A	1		Added	-	HZS2BLL	D5035

PIONEER SERVICE NETWORK CORPORATION

NOTE:PARTS CODE
1:Changeable from old to new.
2:Not Interchangeable an all.
3:Interchangeable in both ways
5:Do not use old parts

Memo: MTV01-029 MN-68
AA-D1729

T.NAKAGAWA ,MANAGER
DP
Technical Support Group
Service Support Division

Classify:

Pioneer

CORRECTION OF SERVICE MANUAL

Date: Sept.22,2000 **No.:** **SI-D01012** **(1/1)**

MODEL No.	**S/M No.**	**PG**	**MODEL No.**	**S/M No.**	**PG**
PDA-4003/UCBWYVLDK	ARP3046	3			

Please correct your service manual

Mark	No.	Description	(Old) Part No.		(New) Part No.
!	7	AC Power Cord	ADG1034	→	**RDG1034**
!	8	AC Power Cord	RDG1127	→	**ADG1127**

PIONEER CORPORATION

Memo: MTV01-033 KT, 9

Y.YAMAMOTO ,MANAGER
HE
Service Engineering Section
Service Division

Pioneer

SERVICE INFORMATION

Date: Oct.1, 2002 **No.:** **SI-D01011E-G** **(1/5)**

MODEL No.	*****	**SER.No.**	**S/M No.**	**PG**
PDP-502MX/LUCBW	A	ALL	ARP3037	
PDP-502MXE/YVLDK	A	ALL	ARP3037	
PDP-505HD/KUC	A	ALL	ARP3037	

	#	**DETAIL**
SYMPTOM	1	Abnormal active cells appear on the screen
CAUSE	1	The select erase sequence cannnot perform correctly after a long time use
SERVICE REMEDY	1	Please see the following
FACTORY COUNTER -MEASURE	1	Same as the above service remedy

< SERVICE REMEDY >

1) Take an accurate measurement of the original Vh before modification
2) Modify a part of the Vh DC-DC CONVERT BLOCK using a Service Part Kit, GXX1211 (See the next page to understand how to modify)
3) Adjust Vh and Vofs (See the attached flowchart to understand how to adjust)
   <Adjusting point>
   Vh: VR751
   Adjust voltage between K753 (Vh) and K752 (PSUS) on Y DRIVE ASSY
   Vofs: VR701
   Adjust voltage between K702 (Vofs) and K701 (SUS GND) on Y DRIVE ASSY
4) Rewrite Vh and Vofs voltage value printed on the Drive Voltage Label.
5) Put a green sticker on the right side of the serial number

Please dispose of the previous Service Information, **SI-D01011D-G** issued on July 19, 2002.

Ref		**CURRENT**	**PARTS**	**CO**	**NEW**	**PARTS**
*****	**#**	**SYMBOL/DESCRIPTION**	**PART NUMBER**	**DE**	**PART NUMBER**	**SYMBOL/DESCRIPTION**
A	1				GXX1211	Service parts kit

PIONEER CORPORATION

K.MATSUMURA ,MANAGER
DP
Technical Support Group
Service Support Division

NOTE:PARTS CODE
1;Changeable from old to new.
2;Not Interchangeable at all.
3;Interchangeable in both ways
5;Do not use old parts

Memo: SY66

Classify:

Modification of Vh DC-DC CONVERT BLOCK

1) Prepare a Service Parts Kit, **GXX1211**, consists of the following new parts
2) Replace old parts with new parts

	OLD	**NEW**
R760, R762, R764, R777	RS1/10S1302F	**RS1/10S1502F**
VR751	VRTS6VS222	**VRTS6VS102**
R752	RS1/10S1201F	**RS1/10S1101F**
D755, D756	RD12MB	**RD18MB**
C760	CKSQYB104K25	**CKSQYF104Z50**
C761	CEHV101M16	**CEHAT101M25**
R769	RS2LMF153J	**RS2LMF223J**

Parts location

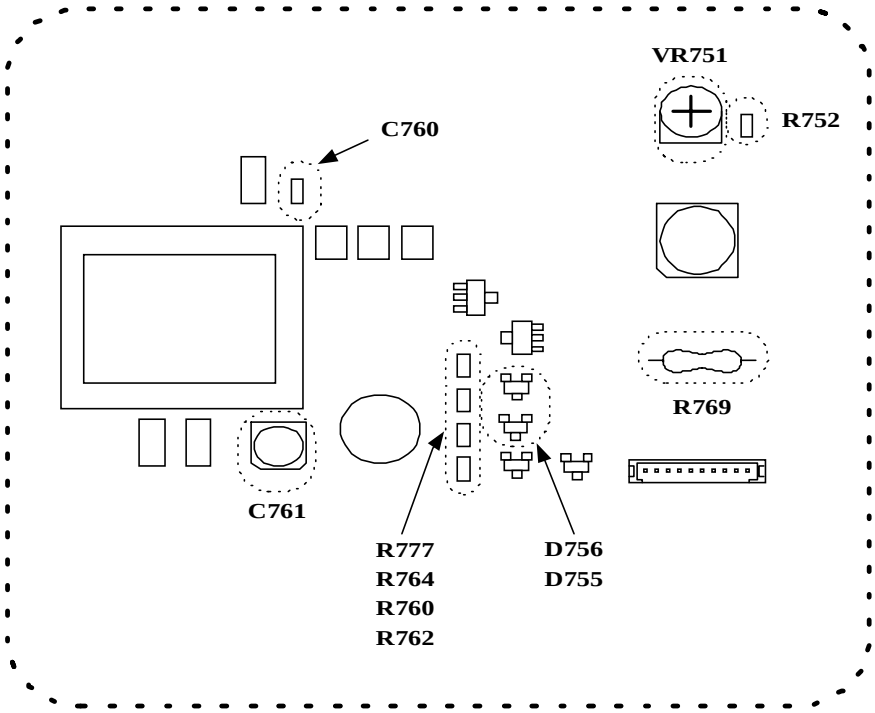

VH DC-DC CONV. BLOCK

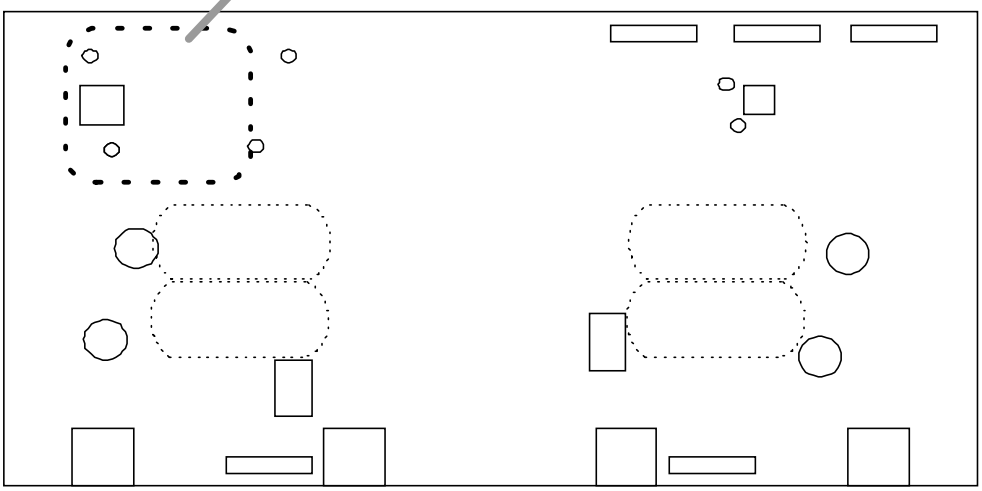

Y DRIVE ASSY

Vh & Vofs Adjustment Flowchart

Take an accurate measurement of the original Vh, the voltage between K753(Vh) and K752(PSUS).
If the Vh is 85V, go to process "1". If the Vh is 110V, go to process "2".

↓

Modify a part of the Vh DC-DC CONVERT BLOCK

(Note 1)
Exclude the dark cells you confirmed at this process when adjusting Vofs.

↓

Input red signal using a signal generator, and display it on full screen.
Observe where dark cells appear on the screen under the condition before adjust Vh and Vofs.
Perform the same thing using green and blue signal also. (Note 1)

(Note 2)
Position of the Drive Voltage Label

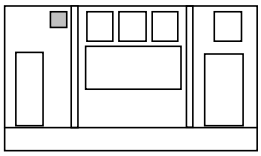

↓

Input white signal using the signal generator, and display it on full screen over 5 minutes.

↓

Adjust so that Vh becomes "**130V**".
(Caution: PSUS and chassis GND are absolutely different. Do not short them.)

"2" → Rewrite Vh voltage value printed on the Drive Voltage Label. (Note 2) (Note 3) → Completed this adjustment

(Note 3)
If the original Vh was 110V, it is not necessary to adjust Vofs.

"1" ↓

Adjust so that Vofs, the voltage between K702(Vofs) and K701(SUS GND), becomes "**-45V**". (Note 4)

(Note 4)
This is temporary voltage setting.

↓

Input red signal using a signal generator, and display it on full screen.
Observe whether dark cells appear on the screen.
Perform the same thing using green and blue signal also.

↓

Do dark cells appear?
(Note 5)

- **No** → Decrease Vofs by 6V. → A → Go to next page
- **Yes** → Vofs≧-35V
  - **Yes** → The panel is defective
  - **No** → Decrease Vofs by 1V → (back to Input red signal)

(Note 5)
Observe the top/bottom of the screen carefully. Generally, the dark cells appear around there.
If there are 29 dark cells or less, go to "No".
Remember that you can exclude dark cells you confirmed at the above process, note 1.

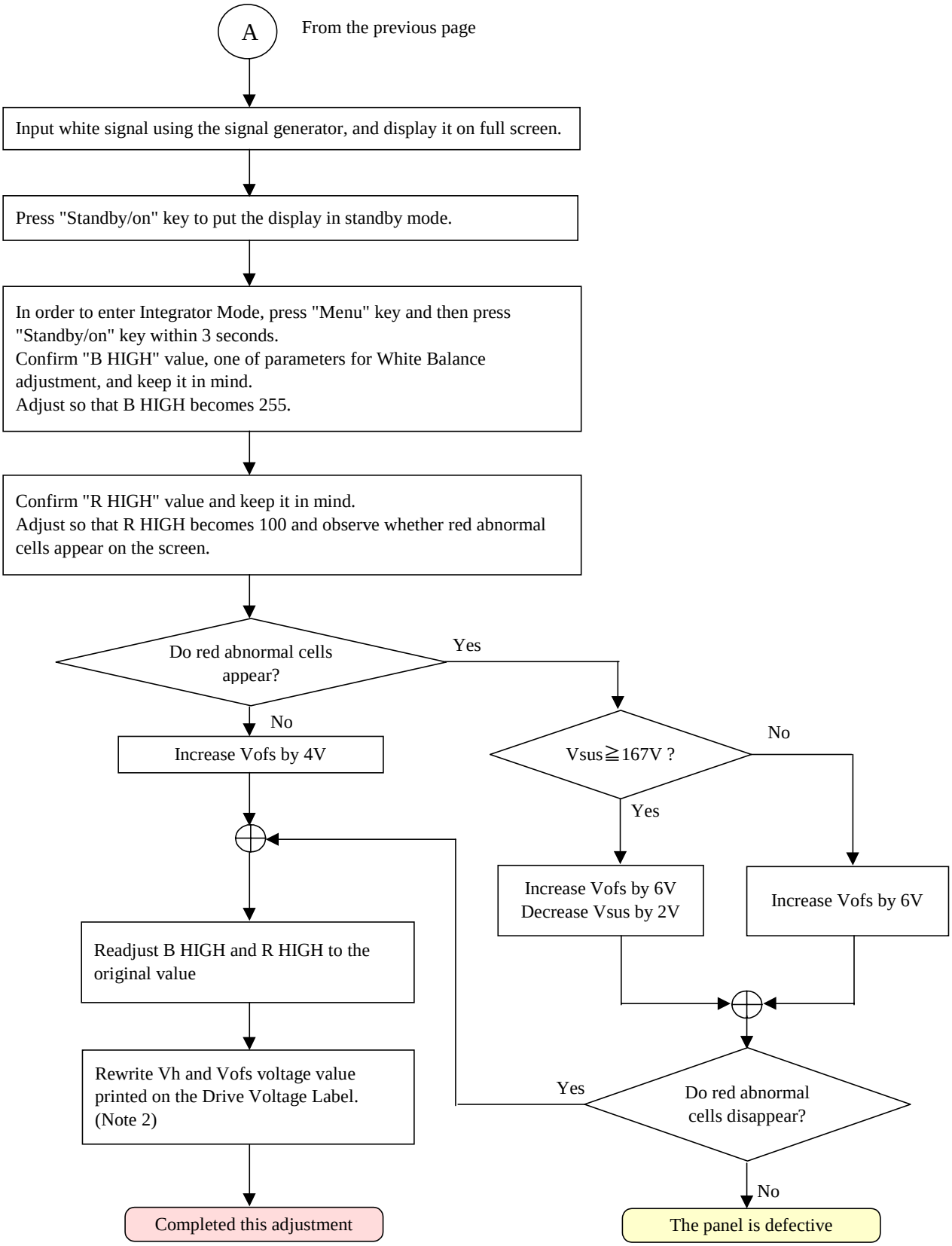
A
From the previous page
Input white signal using the signal generator, and display it on full screen.
Press "Standby/on" key to put the display in standby mode.
In order to enter Integrator Mode, press "Menu" key and then press "Standby/on" key within 3 seconds.
Confirm "B HIGH" value, one of parameters for White Balance adjustment, and keep it in mind.
Adjust so that B HIGH becomes 255.
Confirm "R HIGH" value and keep it in mind.
Adjust so that R HIGH becomes 100 and observe whether red abnormal cells appear on the screen.
Do red abnormal cells appear?
Yes
No
Increase Vofs by 4V
Vsus≧167V ?
No
Yes
Increase Vofs by 6V
Decrease Vsus by 2V
Increase Vofs by 6V
Readjust B HIGH and R HIGH to the original value
Rewrite Vh and Vofs voltage value printed on the Drive Voltage Label. (Note 2)
Yes
Do red abnormal cells disappear?
No
Completed this adjustment
The panel is defective

Example of Process 1 Understanding

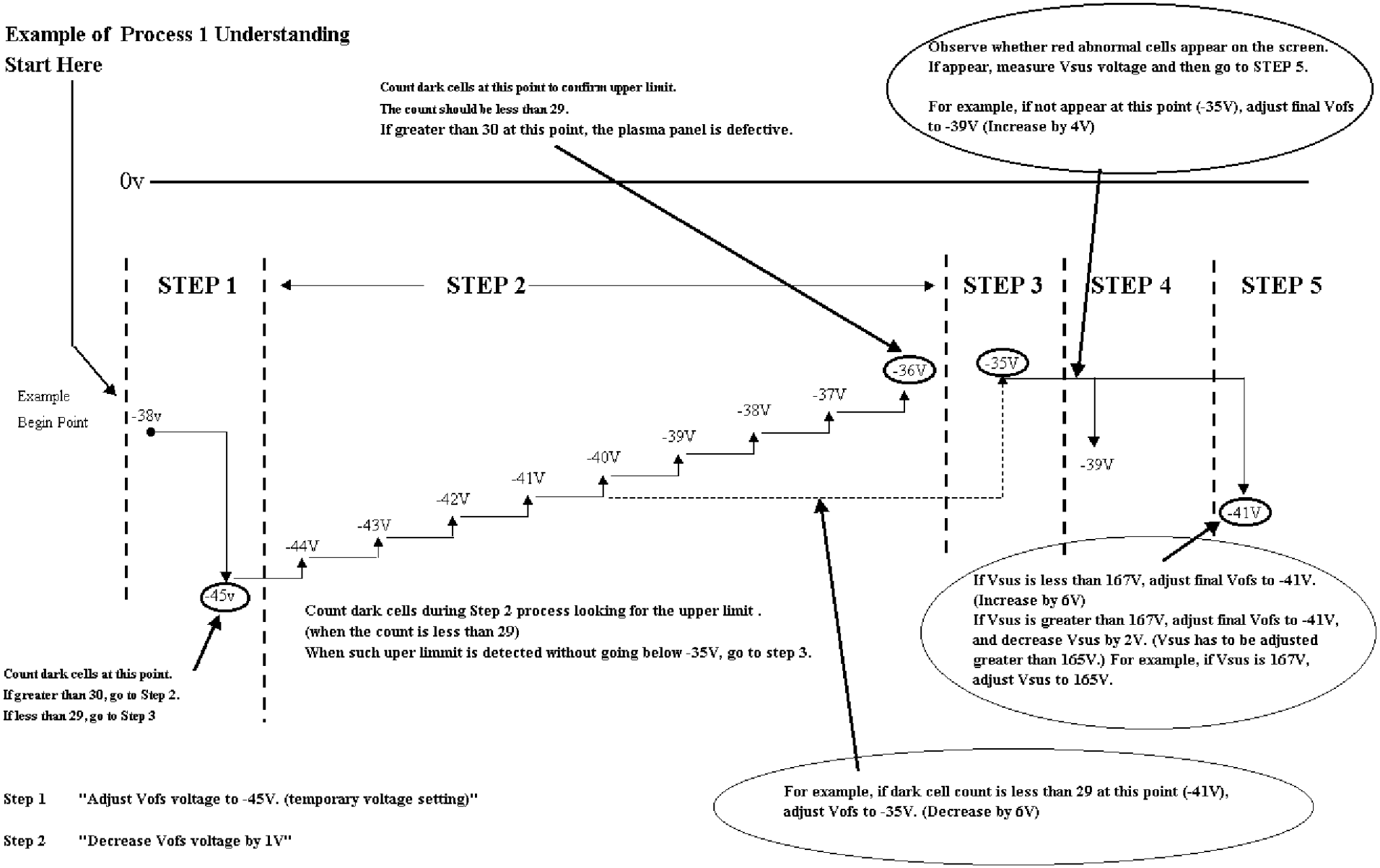

Step 1 "Adjust Vofs voltage to -45V. (temporary voltage setting)"

Step 2 "Decrease Vofs voltage by 1V"

Step 3 "Decrease Vofs voltage by 6V"

Step 4 "Adjust final Vofs voltage by increasing 4V or 6V"

Pioneer

SERVICE INFORMATION

Date: Dec.19,2000 **No.:** **SI-D01011BG** **(1/2)**

MODEL No.	*	**SER.No.**	**S/M No.**	**PG**
PDP-502MX/LUCBW	A	3736-	ARP3037	
PDP-502MXE/YVLDK	A	3601-	ARP3037	
PDP-505HD/KUC	A	1301-	ARP3043	

	#	**DETAIL**
SYMPTOM	1	Red active cells are appeared
CAUSE	1	The select erase sequence cannot be performed after a long time use.
SERVICE REMEDY	1	1) Adjust Vh and Vofs according to flow Vh: VR751 K752-K751 (Y DRIVE Assy) Vofs : VR701 K702-K701 (Y DRIVE Assy) 2) Adjusted voltage are described to Drive Voltage Label. 3) A green seal (8mm in diameter) is pasted near the serial number.
FACTORY COUNTER -MEASURE		Same as the Service Remedy

Please see the following page.

Please discard the previous Service Information
SI-D01011A-G dated Oct.12,2000

Ref		**CURRENT**	**PARTS**	**CO**	**NEW**	**PARTS**
*	#	**SYMBOL/DESCRIPTION**	**PART NUMBER**	**DE**	**PART NUMBER**	**SYMBOL/DESCRIPTION**

PIONEER CORPORATION
Y.YAMAMOTO ,MANAGER
HE
Service Engineering Section
Service Division

NOTE:PARTS CODE
1:Changeable from old to new.
2:Not Interchangeable an all.
3:Interchangeable in both ways
5:Do not use old parts

Memo: MTV01-020A AN 70

Classify:

PDP-502MX(505HD) dark cell measure flow-chart

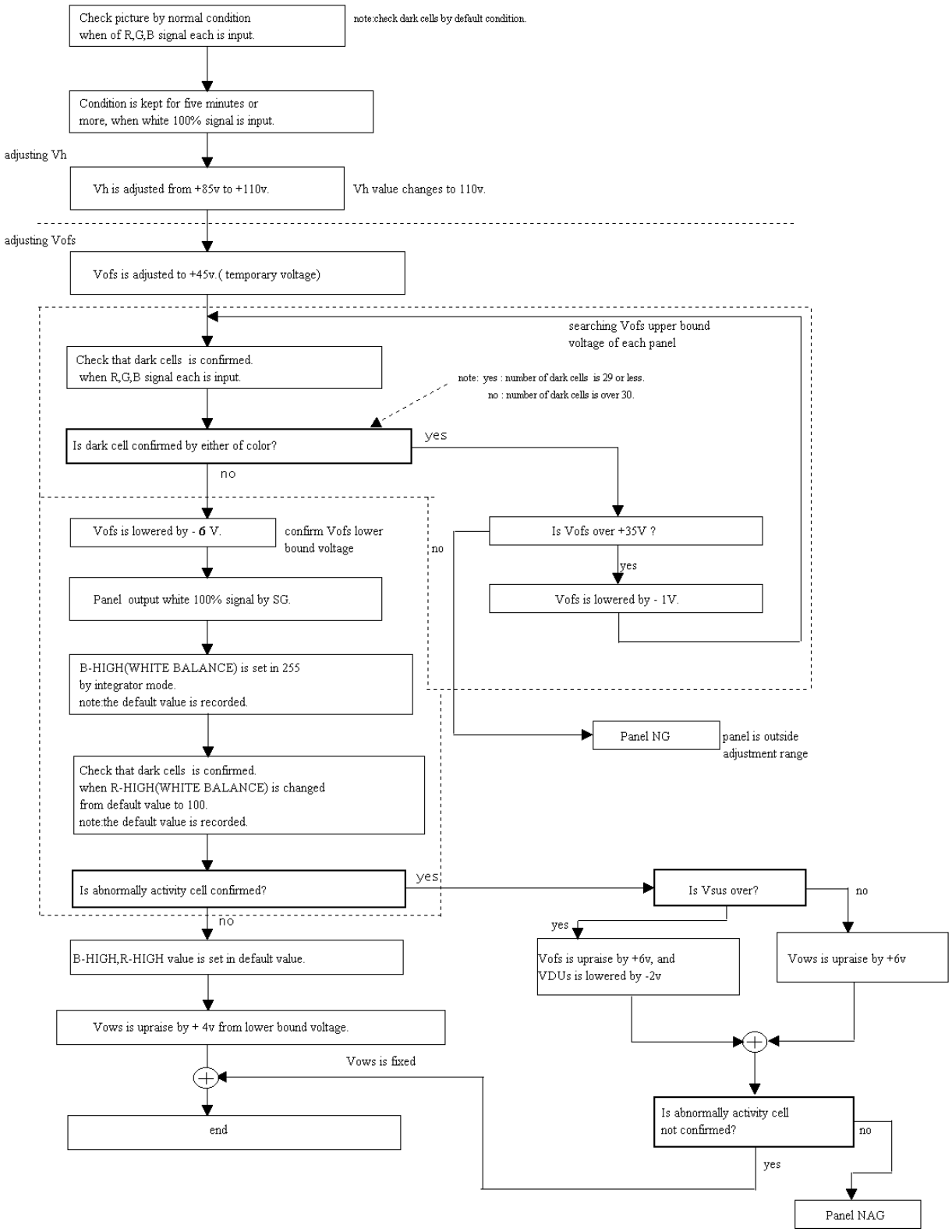

Pioneer

SERVICE INFORMATION

Date: Oct.27,2000 **No.:** **SI-D01010A-G** **(1/1)**

MODEL No.	*	SER.No.	S/M No.	PG
PDP-502MX/LUCBW	A	ALL	ARP3037	
PDP-502MX/LUCBW /1	A	ALL	ARP3075,ARP3078	
PDP-502MXE/YVLDK	A	ALL	ARP3037	
PDP-502MXE/YVLDK /1	A	ALL	ARP3075,ARP3078	

	#	DETAIL
SYMPTOM	1	Panel is cracked by heat stress when still picture which has high brightness is displayed by observation camera. (As shown below.)
CAUSE	1	A part of panel emits light.
SERVICE REMEDY	1	Refer to the following
FACTORY COUNTER -MEASURE		Service remedy only

< Symptom >

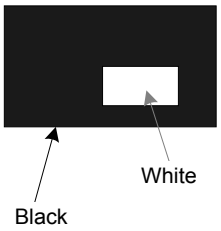

< Service Remedy >

NOTE: These contents change the value in factory mode. If this procedure is failed, PDP panel might be damaged.

* Prepare either remote control unit below.
CU-PDP001(AXD1432), CU-PDP009(AXD1445)

1. Setting the BRIGHT ENHANCE
   Function is set input 1
   |
   Either Integrator mode (Menu -> Power)
   |
   Select OPTION 1
   |
   Select BRIGHT ENHANCE
   |
   Set to VIDEO OFF

2. Change value of PLS NUM OFS
   Enter Service Factory Mode (Menu -> Set -> Power)
   |
   Select PICTURE mode
   |
   Select REFERENCE 1
   |
   Select PLS NUM OFS
   |
   Change value from 8 to 1

Ref *	#	CURRENT SYMBOL/DESCRIPTION	PARTS PART NUMBER	CO DE	NEW PART NUMBER	PARTS SYMBOL/DESCRIPTION

PIONEER CORPORATION

Y.YAMAMOTO ,MANAGER
HE
Service Engineering Section
Service Division

NOTE:PARTS CODE
1:Changeable from old to new.
2:Not Interchangeable an all.
3:Interchangeable in both ways
5:Do not use old parts

Memo: MTV01-019 AN 69

Classify:

Pioneer

CORRECTION OF SERVICE MANUAL

Date: Sept. 7,2000 **No.:** **SI-D01009** **(1/1)**

MODEL No.	**S/M No.**	**PG**	**MODEL No.**	**S/M No.**	**PG**
PRO-710HD/KUXC/CA	ARP3065	5			

Please correct your service manual

Mark	No.	Description	(Old) Part No.		(New) Part No.
	1	Grille	AMM2939	→	**AMM2936**

PIONEER CORPORATION

Memo: MTV01-016 KT, 9

Y.YAMAMOTO ,MANAGER
HE
Service Engineering Section
Service Division

PIONEER
The Art of Entertainment

SERVICE INFORMATION

Date: Oct.24, 1994 **No:** **SI-D49004**

MODEL No	*	SER.No	S/M No	PG	MODEL No	*	SER.No	S/M No	PG
BA-6310A/KU	A	3645701-	ARP2571						
BA-6310CA/KU	A	3664401-	ARP2572						
BA-6311A/KU	A	3602101-	ARP2574						
BA-6350A/KU	A	3648501-	ARP2573						
BA-6351A/KU	A	3610901-	ARP2594						

	#	CHANGE
DETAIL	1	DELETION OF NUTS AND WASHERS, AND ADDITION OF NUTS WITH WASHERS
REASON	1	COST SAVING

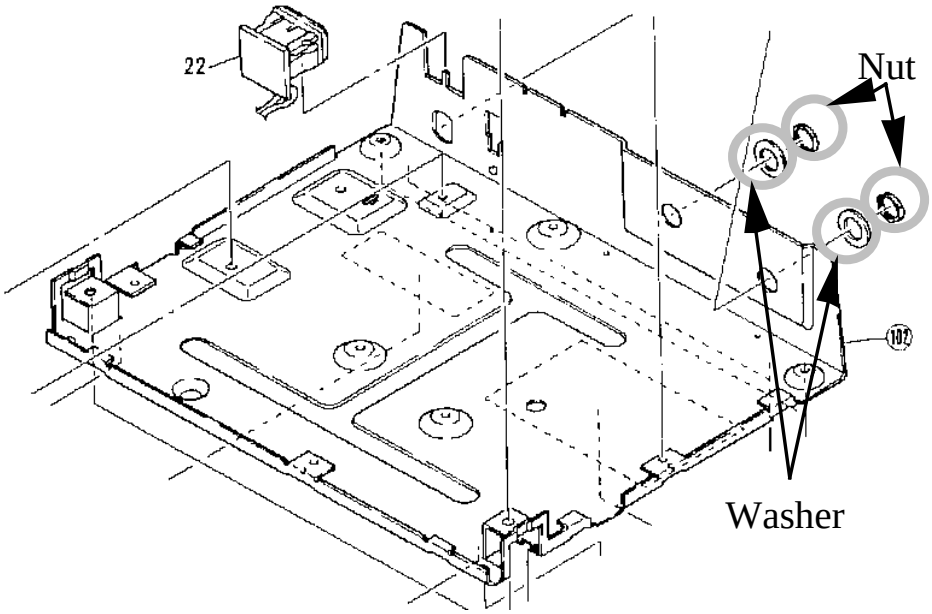

Ref. *	Ref. #	CURRENT PARTS SYMBOL/DESCRIPTION	CURRENT PARTS PART NUMBER	CODE	NEW PARTS PART NUMBER	NEW PARTS SYMBOL/DESCRIPTION
A	1	Nut	ABN-059	2	BBN1005	Nut
A	1	Washer	WAX0F160N100	-	Deleted	

PIONEER ELECTRONIC CORPORATION
Issued by
K. WATANABE, MANAGER
Industrial Engineering Section
Service Division

NOTE: PARTS CODE
1: Changeable from old to new.
2: Not Interchangeable at all.
3: Interchangeable in both ways.
5: Do not use old parts.

SPC49-288 DS-23369A (SPC-SS 9)

PIONEER
The Art of Entertainment

SERVICE INFORMATION

Date: Aug.31, 1994 No: SI-D49003

MODEL No	*	SER. No	S/M No	PG	MODEL No	*	SER. No	S/M No	PG
BA-9510CA/KU	A	3617640-	ARP2847		BA-9510/KU	A	3612573-	ARP2836	14
BA-9510A/KU	A	3605901-	ARP2847		BA-9310/KU	A	3613069-	ARP2836	14
BA-9510CR/KU	A	3602057-	ARP2839		BA-9710C/KU	A	3600051-	ARP2837	
BA-9510C/KU	A	3603565-	ARP2836	14					
BA-9310C/KU	A	3605068-	ARP2836	14					

	#	CHANGE
DETAIL	1	Change of capacitors in Main Ass'y
REASON	1	To improve reliability

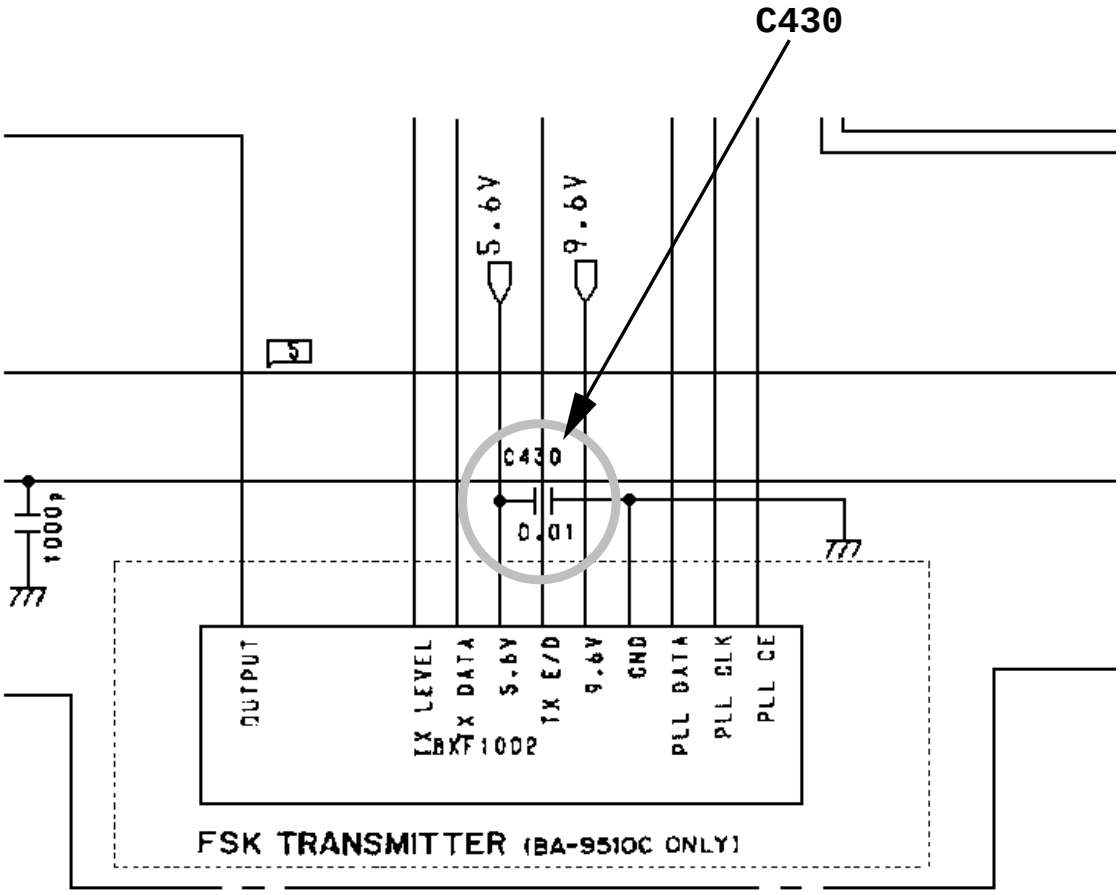

Ref. *	Ref. #	CURRENT PARTS SYMBOL/DESCRIPTION	CURRENT PARTS PART NUMBER	CODE	NEW PARTS PART NUMBER	NEW PARTS SYMBOL/DESCRIPTION
A	1	C430(0.01μF)	CKSQYF103Z50	2	CKSQYB223K50	C430(0.022 μF)

PIONEER ELECTRONIC CORPORATION

Issued by:

Y.IMAMIZU, MANAGER
HE Engineering Section
Service Dev.

NOTE: PARTS CODE
1:Changeable from old to new.
2:Not Interchangeable at all.
3:Interchangeable in both ways.
5:Do not use old parts.

SPC49-179 DS-23420 (EF ,9)

SERVICE INFORMATION

PIONEER
The Art of Entertainment

No :SI-D49002
Date:Jul.27,1994

MODEL NO.	*	SER. NO.	MODEL NO.	*	SER. NO.	MODEL NO.	*	SER. NO.
BA-6311A/KU	A	Running Change						
BA-6351A/KU		3608901-						
BA-6310CA/KU		3638871-						
BA-6310A/KU		3616801-						
BA-6350A/KU	▼	36410010-						

#	DETAIL OF CHANGE(S)	#	REASON FOR CHANGES
1	Change of Manual	1	To meet the safety regulation

SERVICE MANUAL	SERVICE MANUAL
MODEL:BA-6311A S/M NO.:ARP2574 PAGE :	MODEL:BA-6311A S/M NO.:ARP2574 PAGE :
	MODEL:BA-6351A S/M NO.:ARP2594 PAGE :
	MODEL:BA-6310CA S/M NO.:ARP2572 PAGE :
	MODEL:BA-6310A S/M NO.:ARP2571 PAGE :

Ref.		CURRENT PARTS		CO	NEW PARTS	
*	#	SYMBOL/DESCRIPTION	PART NUMBER	DE	PART NUMBER	SYMBOL/DESCRIPTION
A	1	Manual	BRB1029	2	BRB1039	Manual

PIONEER ELECTRONIC CORPORATION

(SPC49-161,DS-23348A,SPC-SS 6)

Issued by:

K.WATANABE,MANAGER
Industrial Engineering Section
Service Department

SERVICE INFORMATION

PIONEER
The Art of Entertainment

No :SI-D49001
Date:Jul.13,1994

MODEL NO.	*	SER. NO.	MODEL NO.	*	SER. NO.	MODEL NO.	*	SER. NO.
BA-9510CA/KU	A	3617640-	BA-9710C/KU	▼	3603059-			
BA-9510A/KU		3605901-	BA-9510CR/KU		3602058-			
BA-9310/KU		3613070-						
BA-9510/KU		3612573-						
BA-9310C/KU		3605068-						
BA-9510C/KU		3603565-						

#	DETAIL OF CHANGE(S)	#	REASON FOR CHANGES
1	Change of 64P IC Socket in Control Ass'y	1	Cost Saving

SERVICE MANUAL

MODEL:BA-9510CA
-9510A
S/M NO.:ARP2847
PAGE :

MODEL:BA-9710C
S/M NO.:ARP2837
PAGE :

MODEL:BA-9510CR
S/M NO.:ARP2839
PAGE :

MODEL:BA-9510C
-9310C
-9510
-9310
S/M NO.:ARP2836
PAGE :

Ref.		CURRENT PARTS		CO	NEW PARTS	
*	#	SYMBOL/DESCRIPTION	PART NUMBER	DE	PART NUMBER	SYMBOL/DESCRIPTION
A	1	64P IC Socket	BKH1002	-	NSP	64P IC Socket

PIONEER ELECTRONIC CORPORATION

(SPC49-138,DS-23368,SPC-SS 9)

Issued by:

K.WATANABE,MANAGER
Industrial Engineering Section
Service Department

Pioneer

SERVICE INFORMATION

Date: May 22, 2003 **No.:** **SI-D04015** **(1/1)**

MODEL No.	*****	**SER.No.**	**S/M No.**	**PG**
PRO-510HD/KUXC/CA	A	R/C	ARP3086	
PRO-610HD/KUXC/CA	A	R/C	ARP3086	
PRO-710HD/KUXC/CA	A	R/C	ARP3086	
SD-532HD5/KBXC	A	R/C	ARP3086	
SD-532HD5/KUXC/CA	A	R/C	ARP3086	
SD-582HD5/KUXC/CA	A	R/C	ARP3086	
PRO-520HD/KUXC/CA	A	R/C	ARP3099	
PRO-620HD/KUXC/CA	A	R/C	ARP3099	
PRO-720HD/KUXC/CA	A	R/C	ARP3099	
SD-533HD5/KBXC	B	R/C	ARP3094	
SD-533HD5/KUXC/CA	B	R/C	ARP3094	
SD-643HD5/KUXC/CA	B	R/C	ARP3094	

	#	**CHANGE**
DETAIL	1	Changed a part (EEPROM) in SIGNAL ASSY.
REASON	1	To improve the performance

Ref *	**#**	**CURRENT SYMBOL/DESCRIPTION**	**PARTS PART NUMBER**	**CO DE**	**NEW PART NUMBER**	**PARTS SYMBOL/DESCRIPTION**
A	1	IC2454	24LC32A(I)P	1	24LC32A-I	IC2454
B	1	IC2301	24LC32A(I)P	1	24LC32A-I	IC2301

PIONEER CORPORATION

K.MATSUMURA ,MANAGER
DP
Technical Support Group
Service Support Division

NOTE:PARTS CODE
1;Changeable from old to new.
2:Not Interchangeable an all.
3:Interchangeable in both ways
5:Do not use old parts

Memo: AA-D4564 SY66

Classify:

Pioneer

SERVICE INFORMATION

Date: May 16, 2003 **No.:** **SI-D04010-G** **(1/2)**

MODEL No.	*****	**SER.No.**	**S/M No.**	**PG**
SD-643HD5/KUXC/CA	A	0006851-	ARP3094	
SD-533HD5/KUXC/CA	A	0012301-	ARP3094	
PRO-730HD/KUXC/CA	A	0002901-	ARP3139	
PRO-630HD/KUXC/CA	A	0002301-	ARP3139	
PRO-530HD/KUXC/CA	A	0003001-	ARP3139	

	#	**DETAIL**
SYMPTOM	1	Over scanning picture is displayed when selecting HD signals.
CAUSE	1	Because HD circuit of these projection TV is designed based on 10305i signal.
SERVICE REMEDY	1	There are two service remedies as following ; 1. Re-adjusting convergence of HD mode using modified HD template 2. Changing convergence data (STATIC and SIZE or V SIZE) as the standard
FACTORY COUNTER -MEASURE	1	Same as service remedy (No.2)

----- Please see the following page -----

Ref		**CURRENT**	**PARTS**	**CO**	**NEW**	**PARTS**
*****	**#**	**SYMBOL/DESCRIPTION**	**PART NUMBER**	**DE**	**PART NUMBER**	**SYMBOL/DESCRIPTION**

PIONEER CORPORATION

K.MATSUMURA ,MANAGER
DP
Technical Support Group
Service Support Division

NOTE:PARTS CODE
1:Changeable from old to new.
2:Not Interchangeable an all.
3:Interchangeable in both ways
5:Do not use old parts

Memo: SY66

Classify:

1. Re-adjusting convergence of HD mode using modified HD template

Adjust convergence in HD mode using the modified convergence template.

(Referring S/M SD series: page 128 on ARP3094
PRO series: page 159 on ARP3139)

2. Changing convergence data (STATIC and SIZE or V SIZE) as the standard

i) SD-643HD5, SD-533HD5
Modify GV, RV and BV convergence data to the following value by Coarse Adjustment of each color.
(Referring to S/M page 128)

* STATIC: 23 steps up (e.g. 0 hex => 17 hex)
* SIZE : 12 steps down (e.g. 90 hex => 84 hex)

ii) PRO-PRO-730HD, PRO-630HD, PRO-530HD
Reduce to **four steps** from the present V SIZE (HD) convergence data by "Size Mode" adjustment.
(Referring to S/M page 159.)

* e.g. 0 => -4

Pioneer

SERVICE INFORMATION

Date: May 9, 2003 **No.:** **SI-D04009** **(1/1)**

MODEL No.	*****	**SER.No.**	**S/M No.**	**PG**
PDP-503MXE-S/TA	A	0000681-	ARP3120	

	#	**CHANGE**
DETAIL	1	Change of parts number of lavels (Only adhesive of labels are changed. The items mentioned on labels are not changed)
REASON	1	Production convenience

Ref		**CURRENT**	**PARTS**	**CO**	**NEW**	**PARTS**
*****	**#**	**SYMBOL/DESCRIPTION**	**PART NUMBER**	**DE**	**PART NUMBER**	**SYMBOL/DESCRIPTION**
A	1	model label	AAL2396	1	AAL2459	model label
A	1	bolt caution label	AAX2902	1	AAX2975	bolt caution label
A	1	terminal label L	AAX2855	1	AAX2976	terminal label L
A	1	terminal label R	AAX2853	1	AAX2977	terminal label R
A	1	cleaning label	AAX2901	1	AAX2978	cleaning label

PIONEER CORPORATION

K.MATUMURA ,MANAGER
DP
Technical Support Group
Service Support Division

NOTE:PARTS CODE
1;Changeable from old to new.
2:Not Interchangeable an all.
3:Interchangeable in both ways
5:Do not use old parts

Memo: AA-D4965 SY66

Classify:

Pioneer

SERVICE INFORMATION

Date: May 9, 2003 **No.:** **SI-D04008** **(1/1)**

MODEL No.	*	SER.No.	S/M No.	PG
PDP-433CMX/LUCBW	A	0000433 - 0005010	ARP3123	
PDP-433MXE/YVLDK	A	0002521 - 0002930	ARP3123	
PDP-433PG/TLDPKBRO	A	0001251 - 0001340	ARP3118	
PDP-433PU/KUC	A	0003181 - 0003810	ARP3111	

	#	CHANGE
DETAIL	1	Changed part number of Digital Video Assy

REASON	1	Production convenience (Panel U-com in Digital Video Assy was changed in order to use for both 433 and 503 series.)

NOTICE The new Digital Video Ass'y, AWV1980, is not applied to PDP-433PE/WYVIO6.

Ref *	#	CURRENT SYMBOL/DESCRIPTION	PARTS PART NUMBER	CO DE	NEW PART NUMBER	PARTS SYMBOL/DESCRIPTION
A	1	Digital Video Ass'y	AWV1941	3	AWV1980	Digital Video Ass'y

PIONEER CORPORATION

K.MATUMURA ,MANAGER
DP
Technical Support Group
Service Support Division

NOTE:PARTS CODE
1;Changeable from old to new.
2:Not Interchangeable an all.
3:Interchangeable in both ways
5:Do not use old parts

Memo: AA-D4571 SY66

Classify:

Pioneer

SERVICE INFORMATION

Date: Apr.24, 2003 **No.:** **SI-D04007** **(1/2)**

MODEL No.	*	SER.No.	S/M No.	PG
PDP-503CMX/LUCBO	A	0017021	ARP3093	
PDP-503MXE-S/TA	A	0000681-	ARP3120	
PDP-503MXE/YVLDK	A	0008341-	ARP3093	
PDP-503PE/WYVIO6	A	0003101-	ARP3107	
PDP-503PG/TLDPKBRO	A	0002271-	ARP3117	
PDP-503PU/KUC	A	0005951-	ARP3107	
PDU-50WX2/TUCYV	A	0001861-	ARP3114	
PDU-50WX2/TUCYV/1	A	0000811-	ARP3114	
PDP-433CMX/LUCBW	A	0008341-	ARP3123	
PDP-433MXE/YVLDK	A	0004381-	ARP3123	
PDP-433PE/WYVIO6	A	0001741-	ARP3111	
PDP-433PG/TLDPKBRO	A	0002631-	ARP3118	
PDP-433PU/KUC	A	0006241-	ARP3111	

	#	CHANGE
DETAIL	1	Changed the way of entering service factory mode.
REASON	1	Production convenience

----- Please see the following page for details. -----

Ref *	#	CURRENT SYMBOL/DESCRIPTION	PARTS PART NUMBER	CO DE	NEW PART NUMBER	PARTS SYMBOL/DESCRIPTION

PIONEER CORPORATION
K.MATSUMURA ,MANAGER
DP
Technical Support Group
Service Support Division

NOTE:PARTS CODE
1;Changeable from old to new.
2:Not Interchangeable an all.
3:Interchangeable in both ways
5:Do not use old parts

Memo: AA-D4950 SY66

Classify:

[Consumer Model]

	OLD	**NEW**
PE,PG MODEL	(with remote controller) MENU -> ENTER -> 0	ENTER -> DISPLAY -> 0
PU MODEL	(with remote controller) MENU -> ENTER -> STAND BY/ON	ENTER -> DISPLAY -> STAND BY/ON

[Industrial Model]

	OLD	**NEW**
ALL	(with remote controller) MENU -> SET -> STAND BY/ON	SET -> DISPLAY -> STAND BY/ON

Pioneer

SERVICE INFORMATION

Date: May 9, 2003 **No.:** **SI-D04006**

MODEL No.	*****	**SER.No.**	**S/M No.**	**PG**
PRO-530HD/KUXC/CA	A	R/C	ARP3138	
PRO-630HD/KUXC/CA	A	R/C	ARP3138	
PRO-730HE/KUXC/CA	A	R/C	ARP3138	

	#	**CHANGE**
DETAIL	1,2	Changed parts

REASON	1	To prevent the electrical discharge
	2	To improve the reliability of CONVER AMP when the power is turned off.

Please see the following page for the details.

Ref		**CURRENT**	**PARTS**	**CO**	**NEW**	**PARTS**
*****	**#**	**SYMBOL/DESCRIPTION**	**PART NUMBER**	**DE**	**PART NUMBER**	**SYMBOL/DESCRIPTION**
A	1	R2086	RS1/16S0R0J	1	RS1/16S101J	R2086
A	2		Added	-	PST9228N	IC1909
A	2		Added	-	RS1/16S222J	R1911
A	2		Added	-	RS1/16S102J	R1906
A	2		Added	-	RS1/16S101J	R1910
A	2	R2048	RS1/16S822J	-	Deleted	
A	2		Added	-	CKSRYB472K50	C1953
A	2		Added	-	CKSRYF104Z16	C1954
A	2		Added	-	CKSRYB103K50	C1955
A	2		Added	-	CKSRYB102K50	C1956

PIONEER CORPORATION

K.MATSUMURA ,MANAGER
DP
Technical Support Group
Service Support Division

NOTE:PARTS CODE
1;Changeable from old to new.
2:Not Interchangeable an all.
3:Interchangeable in both ways
5:Do not use old parts

Memo: AA-D4925 SY66

Classify:

VIDEO UCOM ASS'Y AWV1963 / AWV1992

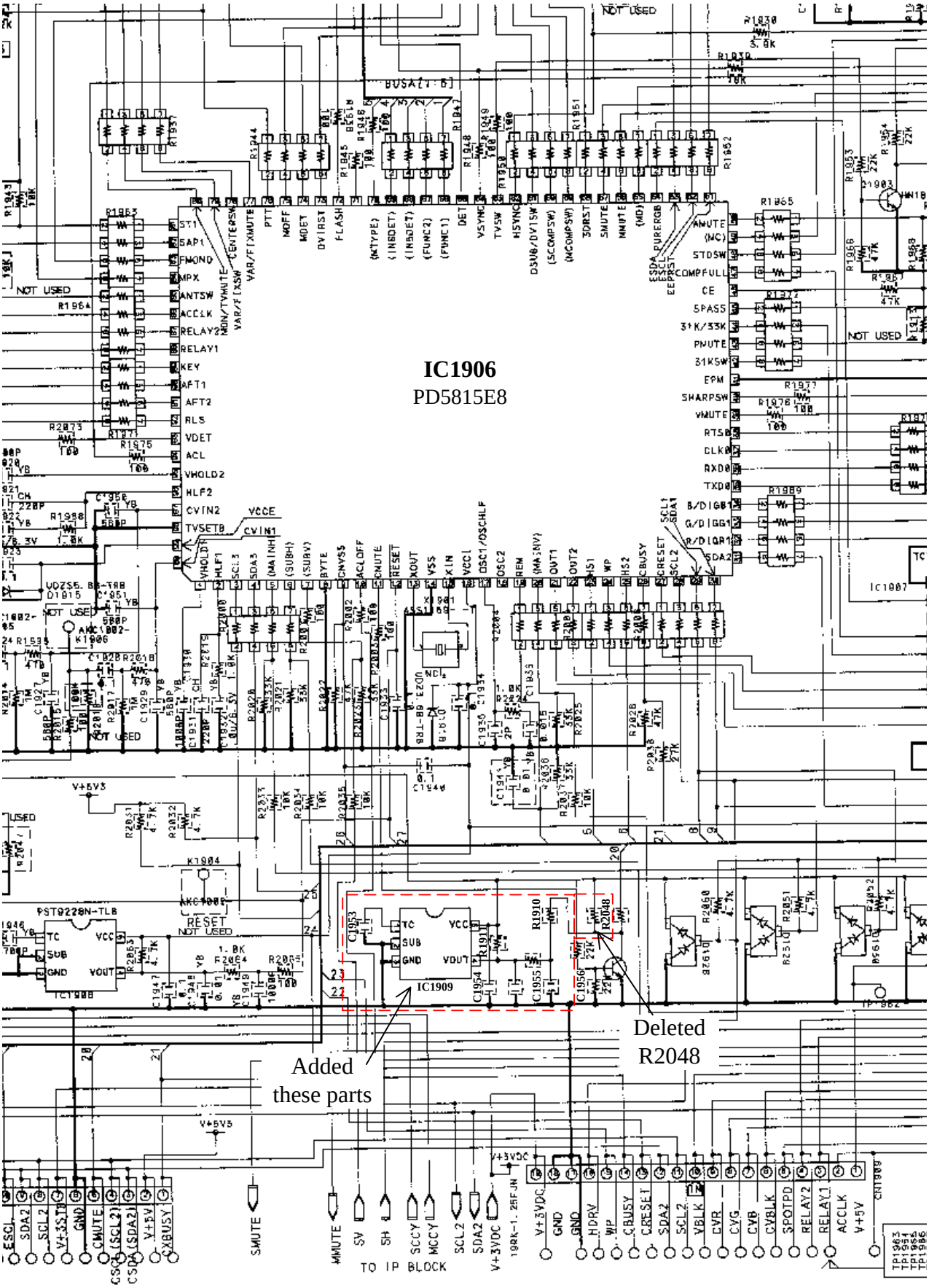

Pioneer

SERVICE INFORMATION

Date: Apr.22, 2003 **No.:** **SI-D04005** **(1/2)**

MODEL No.	*****	**SER.No.**	**S/M No.**	**PG**
PDP-503PC/TAXQ	A	0000221-	ARP3134	
PDP-503PE/WYVIO6	A	0003181-	ARP3141	
PDP-503PE/WYVI6XK	A	0005041-	ARP3141	
PDP-503PG/TLDPKBRO	A	0002291-	ARP3141	
PDP-503PU/KUC	A	0006031-	ARP3144	
PDP-433PE/WYVIO6	A	0001751-	ARP3143	
PDP-433PE/WYVI6XK	A	0007547-	ARP3143	
PDP-433PG/TLDPKBRO	A	0002631-	ARP3143	
PDP-433PU/KUC	A	0006591-	ARP3143	
PDP-503MXE/YVLDK	A	0008861-	ARP3150	
PDP-503MXE-S/TA	A	0000741-	ARP3120	
PDP-503CMX/LUCBO	A	0021951-	ARP3150	
PDP-433CMX/LUCBW	A	0008721-	ARP3156	

	#	**CHANGE**
DETAIL	1	Added parts

REASON	1	To prevent Terminal Panel and Front Case being off from correct position. (Because of the mis-assembling Main Power Button cannot work normally.)

----- Please see the following page for the details. -----

Ref *	**#**	**CURRENT SYMBOL/DESCRIPTION**	**PARTS PART NUMBER**	**CO DE**	**NEW PART NUMBER**	**PARTS SYMBOL/DESCRIPTION**
A	1		Added	-	AMR3371	SWspacer

PIONEER CORPORATION

K.MATSUMURA ,MANAGER
DP
Technical Support Group
Service Support Division

NOTE:PARTS CODE
1;Changeable from old to new.
2:Not Interchangeable an all.
3:Interchangeable in both ways
5:Do not use old parts

Memo: AA-D4969 SY66
AA-D5083

Classify:

Adeed place of SW Spacers

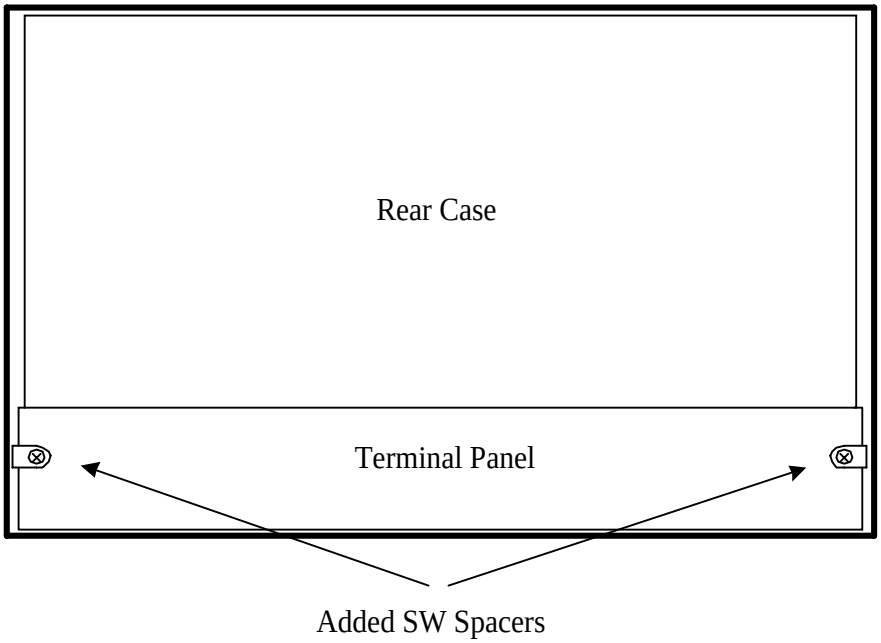

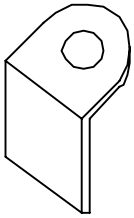

< Enlarged picture >

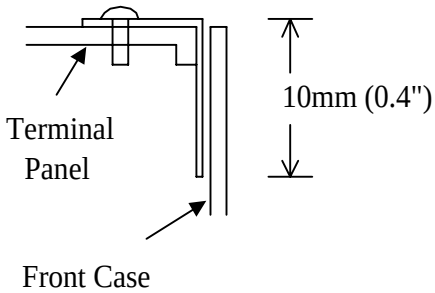

Pioneer

SERVICE INFORMATION

Date: Apr.22, 2003 **No.:** **SI-D04004** **(1/1)**

MODEL No.	*****	**SER.No.**	**S/M No.**	**PG**
SD-533HD5/KBXC	A	R/C	ARP3094	
SD-533HD5/KUXC/CA	A	R/C	ARP3094	
SD-533HD5/KUXC/CA1	A	R/C	ARP3163	
SD-643HD5/KUXC/CA	A	R/C	ARP3094	
SD-643HD5/KUXC/CA1	A	R/C	ARP3163	

	#	**CHANGE**
DETAIL	1	Changed parts in FRONT LEDASSY, AWZ6608.
REASON	1	Production convenience

B FRONT LED ASSY (AWZ6608)

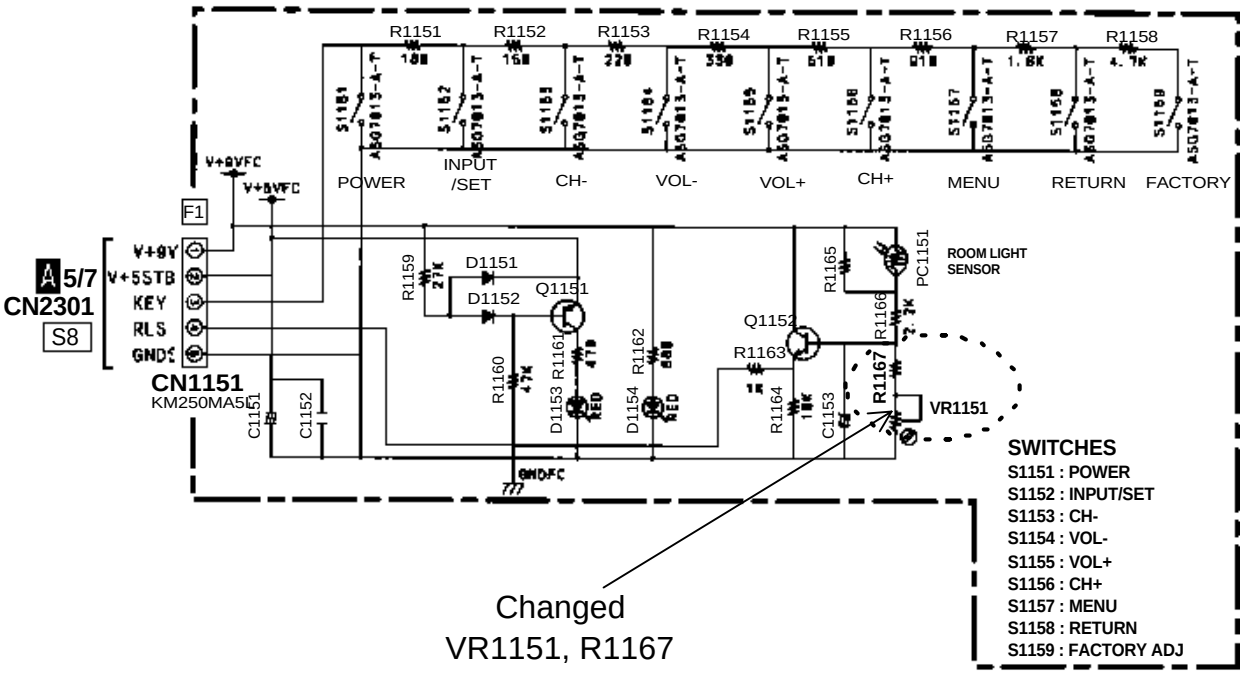

Ref *	**#**	**CURRENT SYMBOL/DESCRIPTION**	**PARTS PART NUMBER**	**CO DE**	**NEW PART NUMBER**	**PARTS SYMBOL/DESCRIPTION**
A	1	VR1151	VCP1160	2	VCP1162	VR1151
A	1	R1167	RD1/4PU183J	2	RD1/4PU562J	R1167

PIONEER CORPORATION

K.MATUMURA ,MANAGER
DP
Technical Support Group
Service Support Division

NOTE:PARTS CODE
1;Changeable from old to new.
2:Not Interchangeable an all.
3:Interchangeable in both ways
5:Do not use old parts

Memo: SPC58-003 SY66
AA-D4999

Classify:

Pioneer

SERVICE INFORMATION

Date: Apr.18, 2003 **No.:** **SI-D04003** **(1/1)**

MODEL No.	*****	**SER.No.**	**S/M No.**	**PG**
PRO-530HD/KUXC/CA	A	R/C	ARP3138	
PRO-630HD/KUXC/CA	A	R/C	ARP3138	
PRO-730HD/KUXC/CA	A	R/C	ARP3138	

	#	**CHANGE**
DETAIL	1	Changed parts in LED RLS ASSY, AWZ6719

REASON	1	Production convenience

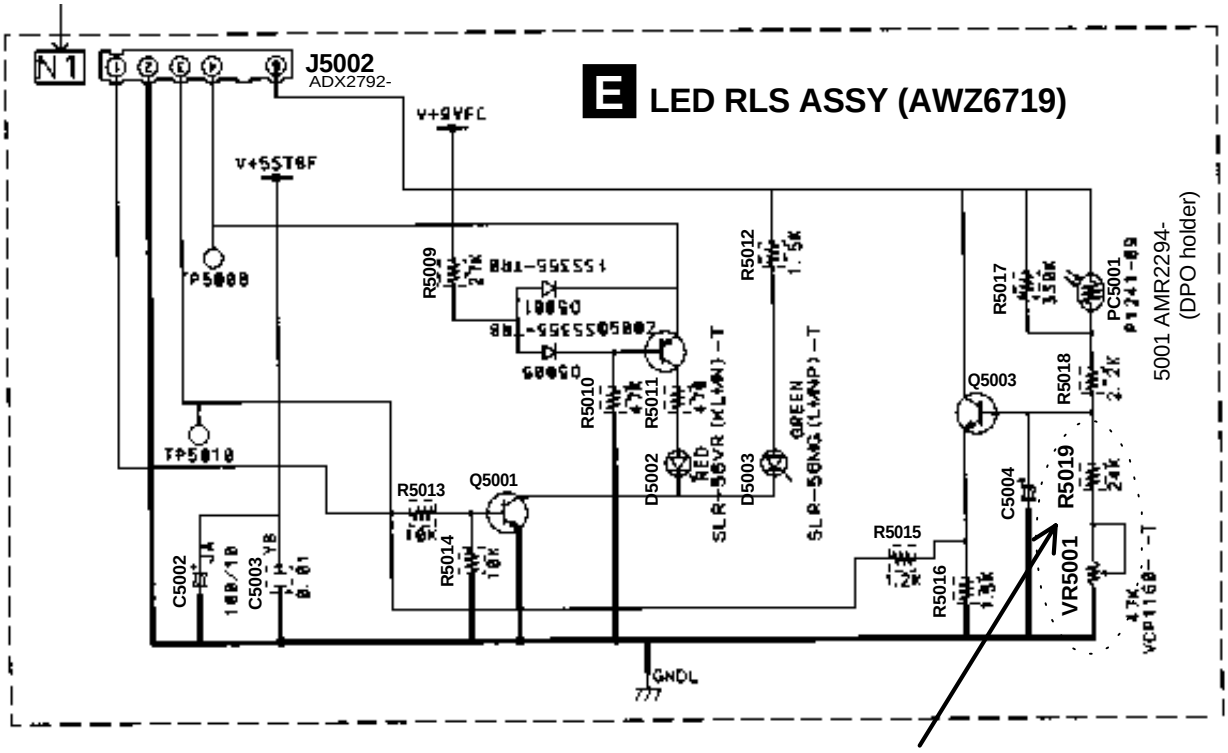

Changed VR5001, R5019

Ref		**CURRENT**	**PARTS**	**CO**	**NEW**	**PARTS**
*****	**#**	**SYMBOL/DESCRIPTION**	**PART NUMBER**	**DE**	**PART NUMBER**	**SYMBOL/DESCRIPTION**
A	1	VR5001	VCP1160	2	VCP1162	VR5001
A	1	R5019	RS1/16S243J	2	RS1/16S123J	R5019

PIONEER CORPORATION

K.MATUMURA ,MANAGER
DP
Technical Support Group
Service Support Division

NOTE:PARTS CODE
1;Changeable from old to new.
2;Not Interchangeable an all.
3;Interchangeable in both ways
5;Do not use old parts

Memo: SPC58-012 SY66
AA-D4998

Classify:

Pioneer

SERVICE INFORMATION

Date: Apr.18, 2003 **No.:** **SI-D04002** **(1/1)**

MODEL No.	*****	**SER.No.**	**S/M No.**	**PG**
PDP-503CMX/LUCBO	A	0010251-	ARP3093	
PDP-503MXE-S/TA	A	0000601-	ARP3120	
PDP-503MXE/YVLDK	A	0005891-	ARP3093	
PDP-503PE/WYVIO6	A	0002801-	ARP3107	
PDP-503PG/TLDPKBRO	A	0001141-	ARP3117	
PDP-503PU/KUC	A	0003311-	ARP3107	

	#	**CHANGE**
DETAIL	1	Changed part number of Digital Video Assy

REASON	1	Production convenience (Panel U-com in Digital Video Assy was changed in order to use for both 433 and 503 series.)

Ref		**CURRENT**	**PARTS**	**CO**	**NEW**	**PARTS**
*****	**#**	**SYMBOL/DESCRIPTION**	**PART NUMBER**	**DE**	**PART NUMBER**	**SYMBOL/DESCRIPTION**
A	1	Digital Video Assy	AWV1970	3	AWV1979	Digital Video Assy

PIONEER CORPORATION

K.MATSUMURA ,MANAGER
DP
Technical Support Group
Service Support Division

NOTE:PARTS CODE
1;Changeable from old to new.
2:Not Interchangeable an all.
3:Interchangeable in both ways
5:Do not use old parts

Memo: AA-D4569 SY66

Classify:

Pioneer

SERVICE INFORMATION

Date: Apr.10,2003 **No.:** **SI-D04001** **(1/3)**

MODEL No. * **SER.No.** **S/M No.** **PG**

See to following page

	#	CHANGE
DETAIL	1	Change of parts in ADR RESONANCE ASS'Y
REASON	1	Production convenience

----- Please see the following pages for the parts location -----

Ref *	#	CURRENT SYMBOL/DESCRIPTION	PARTS PART NUMBER	CO DE	NEW PART NUMBER	PARTS SYMBOL/DESCRIPTION
A	1	Q6710, Q6711	FS30ASJ-2	1	2SK3483	Q6710, Q6711

PIONEER CORPORATION

K.MATSUMURA ,MANAGER
DP
Technical Support Group
Service Support Division

NOTE:PARTS CODE
1;Changeable from old to new.
2:Not Interchangeable an all.
3:Interchangeable in both ways
5:Do not use old parts

Memo: SPC57-433 SY66
AA-D4514

Classify:

MODEL No.	*	SER.No.	S/M No.	PG
PDP-503PE/WYVIO6	A	R/C	ARP3108	
PDP-503PG/TLDPKBRO	A	R/C	ARP3117	
PDP-503PU/KUC	A	R/C	ARP3108	
PDP-503PC/TAXQ	A	R/C	ARP3135	
PDP-503PE/WYVI6XK	A	R/C	ARP3108	
PDP-503CMX/LUCBO	A	R/C	ARP3100	
PRO-1000HD/LUXC/CA	A	R/C	ARP3100	
PDP-503MXE-S/TA	A	R/C	ARP3120	
PDP-503MXE/YVLDK	A	R/C	ARP3100	
PDU-50WX2/TUCYV	A	R/C	ARP3115	
PDU-50WX2/TUCYV/1	A	R/C	ARP3115	
PDP-433PE/WYVIO6	A	R/C	ARP3112	
PDP-433PG/TLDPKBRO	A	R/C	ARP3118	
PDP-433PU/KUC	A	R/C	ARP3112	
PDP-433PE/WYVI6XK	A	R/C	ARP3112	
PDP-433CMX/LUCBW	A	R/C	ARP3124	
PRO-800HD/LUXC/VA	A	R/C	ARP3124	
PDP-433MXE/YVLDK	A	R/C	ARP3124	
PDU-43WX2/TUCYV	A	R/C	ARP3121	

ADR RESONANCE ASS'Y

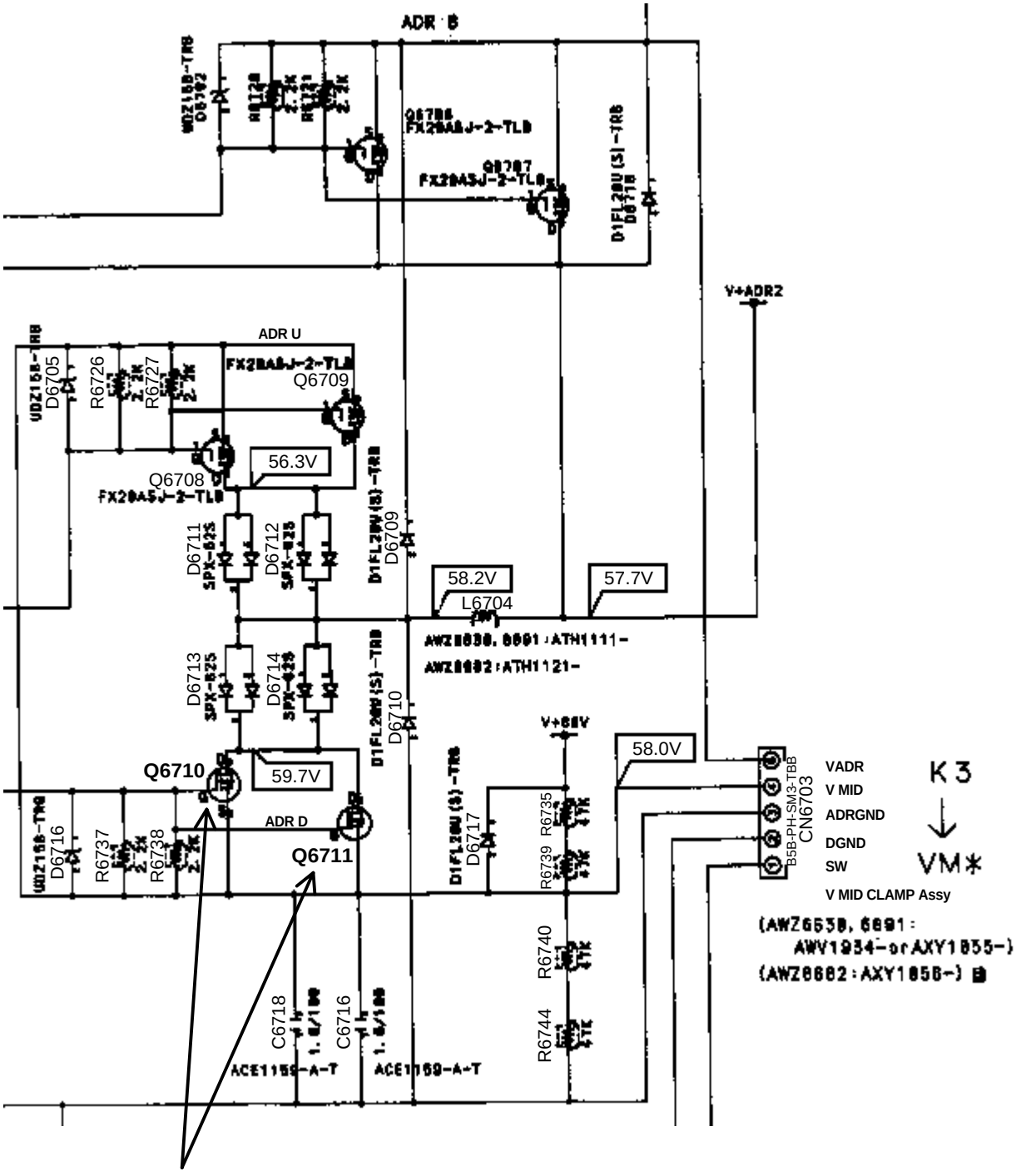

Changed
Q6710, Q6711

Pioneer

SERVICE INFORMATION

Date: Mar.31, 2003 **No.:** **SI-D03050** **(1/2)**

MODEL No.	*****	**SER.No.**	**S/M No.**	**PG**
PDP-433PE/WYVIO6	A	Please see the following page	ARP3112	
PDP-433PE/WYVI6XK	A		ARP3112	
PDP-433PG/TLDPKBRO	A		ARP3118	
PDP-433PU/KUC	A		ARP3112	
PDP-433CMX/LUCBW	B		ARP3124	
PDP-433MXE/YVLDK	B		ARP3124	
PDP-503PC/TAXQ	C		ARP3135	
PDP-503PE/WYVIO6	C		ARP3108	
PDP-503PE/WYVI6XK	C		ARP3108	
PDP-503PG/TLDPKBRO	C		ARP3117	
PDP-503PU/KUC	C		ARP3108	
PDP-503CMX/LUCBO	D		ARP3100	
PDP-503MXE/YVLDK	D		ARP3100	
PDP-503MXE-S/TA	D		ARP3120	

	#	**CHANGE**
DETAIL	1	Added service parts.
REASON	1	Production convenience.

----- Please see the following page for details. -----

Ref *	**#**	**CURRENT SYMBOL/DESCRIPTION**	**PARTS PART NUMBER**	**CO DE**	**NEW PART NUMBER**	**PARTS SYMBOL/DESCRIPTION**
A	1		Added	-	AZN2513	rear case 43P
B	1		Added	-	AZN2515	rear case 43CMX
C	1		Added	-	AZN2512	rear case 50P
D	1		Added	-	AZN2514	rear case 50CMX

PIONEER CORPORATION

K.MATSUMURA ,MANAGER
DP
Technical Support Group
Service Support Division

NOTE:PARTS CODE
1;Changeable from old to new.
2:Not Interchangeable an all.
3:Interchangeable in both ways
5:Do not use old parts

Memo: SPC57-450 SY66
AA-D4814

Classify:

* These new rear case were made for only service use, and it can be used instead of aluminum rear case.
In other words, it cannot be used instead of steel rear case.
Please see the following list for the details.

	aluminum rear case	steel rear case	New aluminum rear case
MODEL	Parts No. Serial No.	Parts No. Serial No.	Parts No.
PDP-433PE/WYVIO6	ANE1600 -0001480	ANE1607 0001481-	AZN2513
PDP-433PE/WYVI6XK	ANE1600 -0003880	ANE1607 0003881-	AZN2513
PDP-433PG/TLDPKBRO	ANE1600 -0001270	ANE1607 0001271-	AZN2513
PDP-433PU/KUC	ANE1600 -0002920	ANE1607 0002921-	AZN2513
PDP-433CMX/LUCBW	ANE1601 -0005130	ANE1608 0005131-	AZN2515
PDP-433MXE/YVLDK	ANE1601 -0003670	ANE1608 0003671-	AZN2515
PDP-503PC/TAXQ	ANE1598 -0000080	ANE1609 0000081-	AZN2512
PDP-503PE/WYVIO6	ANE1598 -0002800	ANE1609 0002801-	AZN2512
PDP-503PE/WYVI6XK	ANE1598 -0004110	ANE1609 0004111-	AZN2512
PDP-503PG/TLDPKBRO	ANE1598 -0001140	ANE1609 0001141-	AZN2512
PDP-503PU/KUC	ANE1598 -0003370	ANE1609 0003371-	AZN2512
PDP-503CMX/LUCBO	ANE1597 -0010250	ANE1610 0010251-	AZN2514
PDP-503MXE/YVLDK	ANE1597 -0005990	ANE1610 0005991-	AZN2514
PDP-503MXE-S/TA	ANE1597 -0000600	ANE1610 0000601-	AZN2514

[EX.] When you replace aluminum rear case of PDP-433PE/WYVIO6, you can use new rear case, AZN2513.

Pioneer

SERVICE INFORMATION

Date: Mar.31, 2003 **No.:** **SI-D03049** **(1/2)**

MODEL No.	*****	**SER.No.**	**S/M No.**	**PG**
SD-533HD5/KUXC/CA	A	R/C	ARP3094	
SD-533HD5/KBXC	A	R/C	ARP3094	
SD-643HD5/KUXC/CA	A	R/C	ARP3094	

	#	**CHANGE**
DETAIL	1,2	Changed parts

REASON	1	Prevent out of current specification of the V deflection Service Assy.
	2	For increasing margin of RLS adjustment

----- Please see the back of this page -----

Ref		**CURRENT**	**PARTS**	**CO**	**NEW**	**PARTS**
*****	**#**	**SYMBOL/DESCRIPTION**	**PART NUMBER**	**DE**	**PART NUMBER**	**SYMBOL/DESCRIPTION**
A	1	R0830	RS2MMF1R5J	1	RS1MMF3R9J	R0830
A	1	C0821	CFTLA224J50	1	CFTLA683J2A	C0821
A	2	R1167	RD1/4PU562J	1	RD1/4PU183J	R1167

PIONEER CORPORATION

K.MATUMURA ,MANAGER
DP
Technical Support Group
Service Support Division

NOTE:PARTS CODE
1;Changeable from old to new.
2:Not Interchangeable an all.
3:Interchangeable in both ways
5:Do not use old parts

Memo: AA-D4800 SY66
AA-D4821

Classify:

Deflection Service Ass'y
AWV1909

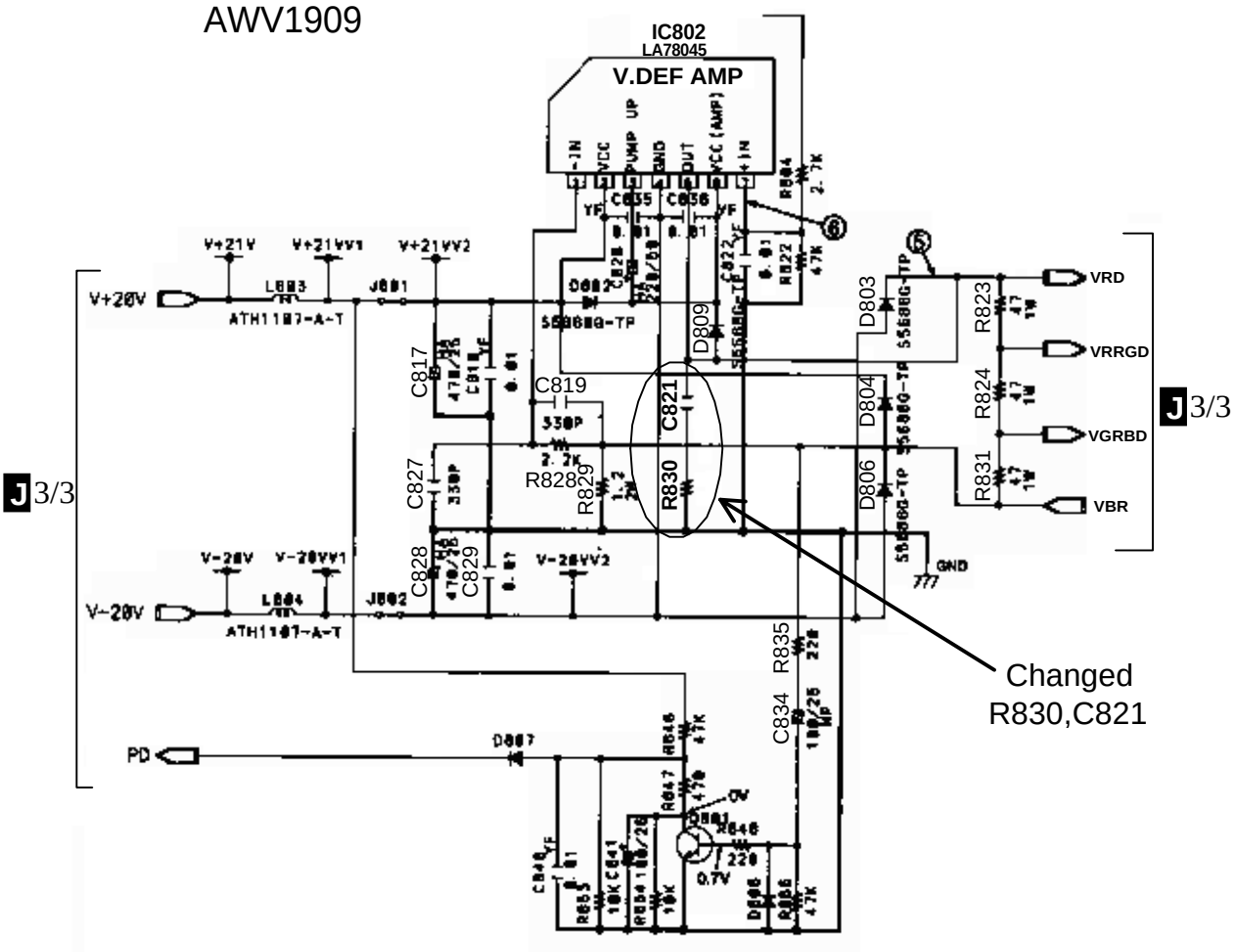

Front Control Ass'y
AWZ6608

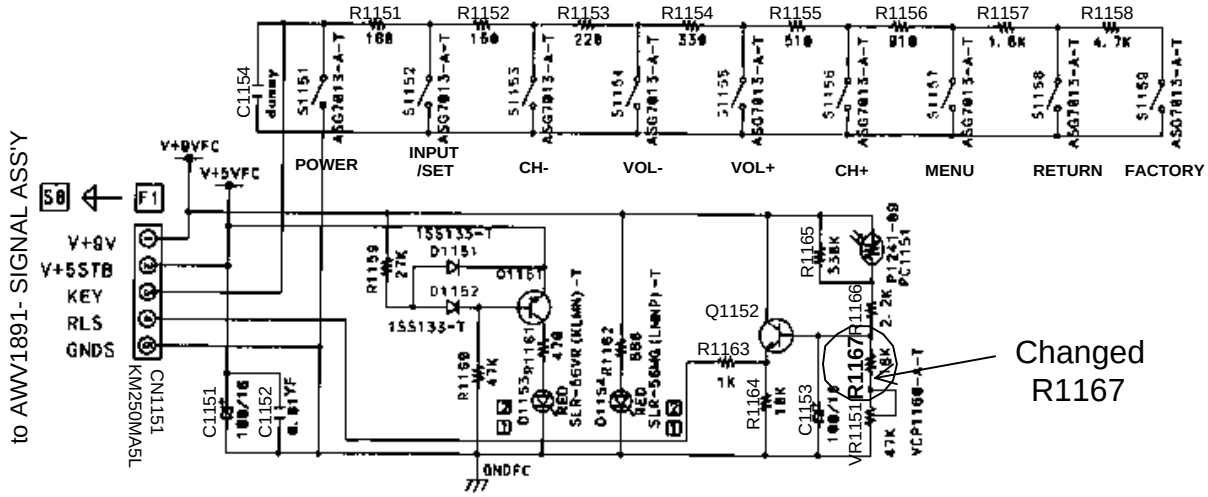

Pioneer

SERVICE INFORMATION

Date: Mar.5, 2003 **No.:** **SI-D03048** **(1/1)**

MODEL No.	*****	**SER.No.**	**S/M No.**	**PG**
PRO-1000HD/LUXC/CA	A	0003356-	ARP3093	
PRO-800HD/LUXC/CA	A	0001551-	ARP3123	

	#	**CHANGE**
DETAIL	1	Change of the operating instructions (page18 and 19)
REASON	1	Change of specification

Ref		**CURRENT**	**PARTS**	**CO**	**NEW**	**PARTS**
*****	**#**	**SYMBOL/DESCRIPTION**	**PART NUMBER**	**DE**	**PART NUMBER**	**SYMBOL/DESCRIPTION**
A	1	operating instructions	ARB1548	2	ARB1550	operating instructions

PIONEER CORPORATION

K.MATUMURA ,MANAGER
DP
Technical Support Group
Service Support Division

NOTE:PARTS CODE
1;Changeable from old to new.
2:Not Interchangeable an all.
3:Interchangeable in both ways
5:Do not use old parts

Memo: SPC57-463 SY66
AA-D4703

Classify:

Pioneer

SERVICE INFORMATION

Date: Mar.5, 2003 **No.:** **SI-D03047** **(1/1)**

MODEL No.	*****	**SER.No.**	**S/M No.**	**PG**
PRO-710HD/KUXC/CA	A	R/C	ARP3086	
PRO-610HD/KUXC/CA	A	R/C	ARP3086	
PRO-510HD/KUXC/CA	A	R/C	ARP3086	
SD-582HD5/KUXC/CA	A	R/C	ARP3086	
SD-532HD5/KUXC/CA	A	R/C	ARP3086	
SD-532HD/KBXC	A	R/C	ARP3086	
PRO-720HD/KUXC/CA	A	R/C	ARP3095	
PRO-620HD/KUXC/CA	A	R/C	ARP3095	
PRO-520HD/KUXC/CA	A	R/C	ARP3095	

	#	**CHANGE**
DETAIL	1	Changed parts, R5094 and R5095 in RGB SW Assy (AWZ6468)

REASON	1	To improve the reliability for sync lock with Samsung STB, SIR-TS160

In PRO-710HD, PRO-610HD, PRO-510HD, SD-582HD5 and SD-532HD5,
there are two different models (original model and value analysis model) respectively.
Confirm the serial No. of the product rear side, and use seach service manual.
Refer to page 2 of ARP3086.

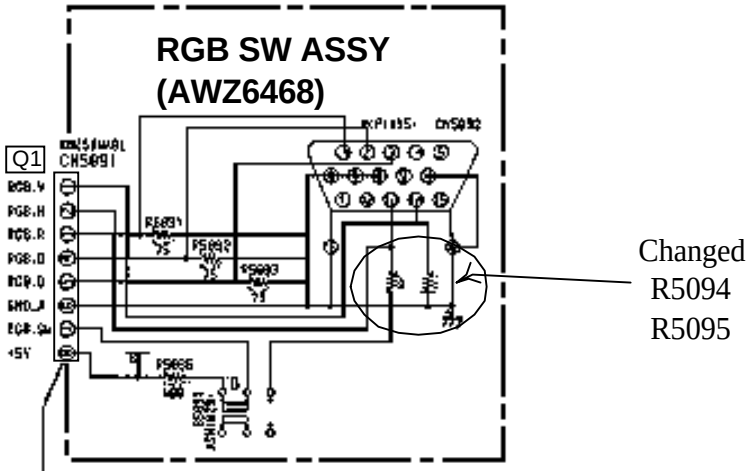

Ref		**CURRENT**	**PARTS**	**CO**	**NEW**	**PARTS**
*****	**#**	**SYMBOL/DESCRIPTION**	**PART NUMBER**	**DE**	**PART NUMBER**	**SYMBOL/DESCRIPTION**
A	1	R5094, R5095	RS1/16S750J	1	RS1/16S222J	R5094, R5095

PIONEER CORPORATION

K.MATSUMURA ,MANAGER
DP
Technical Support Group
Service Support Division

NOTE:PARTS CODE
1;Changeable from old to new.
2:Not Interchangeable an all.
3:Interchangeable in both ways
5:Do not use old parts

Memo: SPC57-513 SY66
AA-D4873

Classify:

Pioneer

SERVICE INFORMATION

Date: Feb.25, 2003 **No.:** **SI-D03046** **(1/1)**

MODEL No.	*****	**SER.No.**	**S/M No.**	**PG**
SD-533HD5/KBXC	A	R/C	ARP3094	
SD-533HD5/KUXC/CA	A	R/C	ARP3094	
SD-643HD5/KUXC/CA	A	R/C	ARP3094	

	#	**CHANGE**
DETAIL	1	Changed parts

REASON	1	To improve the reliability.

Changed
C3205

Deleted
C3207

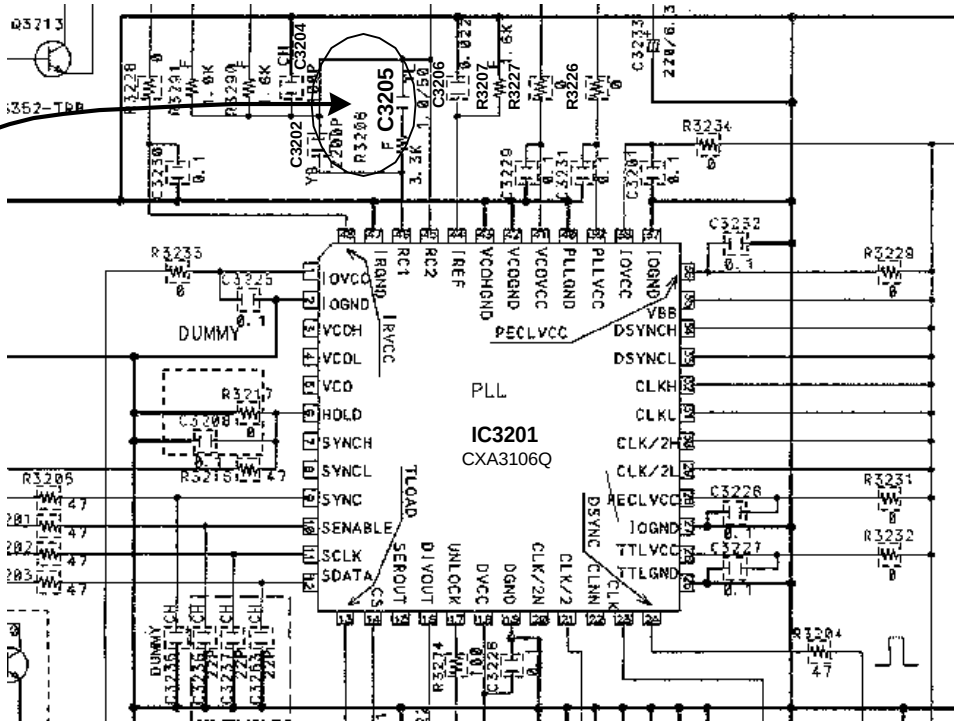

VIDEO IP A'SSY

Ref		**CURRENT**	**PARTS**	**CO**	**NEW**	**PARTS**
*****	**#**	**SYMBOL/DESCRIPTION**	**PART NUMBER**	**DE**	**PART NUMBER**	**SYMBOL/DESCRIPTION**
A	1	C3205	ACE1130	1	CFTLA105J50	C3205
A	1	C3207	ACE1130	-	Deleted	

PIONEER CORPORATION

K.MATUMURA ,MANAGER
DP
Technical Support Group
Service Support Division

NOTE:PARTS CODE
1;Changeable from old to new.
2;Not Interchangeable an all.
3;Interchangeable in both ways
5;Do not use old parts

Memo: SPC57-434 SY66
AA-D4801

Classify:

Pioneer

SERVICE INFORMATION

Date: Feb.25, 2003 **No.:** **SI-D03045** **(1/2)**

MODEL No.	*****	**SER.No.**	**S/M No.**	**PG**
PDP-503PG/TLDPKBRO	A	0001341-	ARP3117	
PDP-433PG/TLDPKBRO	B	0001271-	ARP3118	

	#	**CHANGE**
DETAIL	1	Changed labels
REASON	1	Authorized by MIC

----- Please see the following page for pictures of each label. -----

Ref		**CURRENT**	**PARTS**	**CO**	**NEW**	**PARTS**
*****	**#**	**SYMBOL/DESCRIPTION**	**PART NUMBER**	**DE**	**PART NUMBER**	**SYMBOL/DESCRIPTION**
A	1		Added	-	AAX2948	MIC label
A	1		Added	-	AAX2950	MIC label for packing box
B	1		Added	-	AAX2949	MIC label
B	1		Added	-	AAX2951	MIC label for packing box
AB	1	KTL label	AAX2912	-	Deleted	

PIONEER CORPORATION

K.MATUMURA ,MANAGER
DP
Technical Support Group
Service Support Division

NOTE:PARTS CODE
1;Changeable from old to new.
2:Not Interchangeable an all.
3:Interchangeable in both ways
5:Do not use old parts

Memo: SPC57-341 SY66
AA-D4707

Classify:

AAX2948

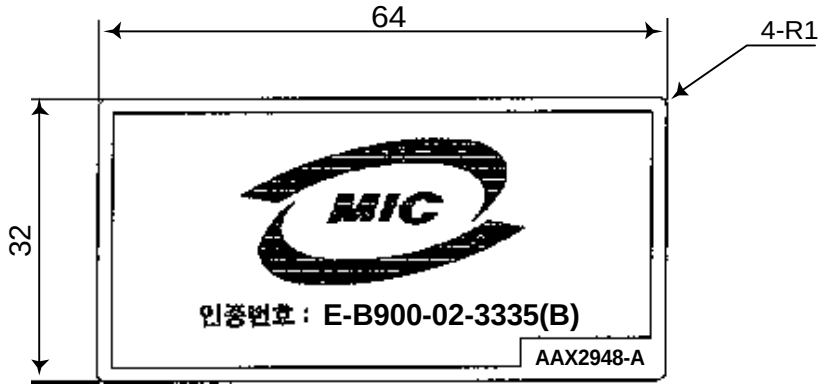

AAX2949

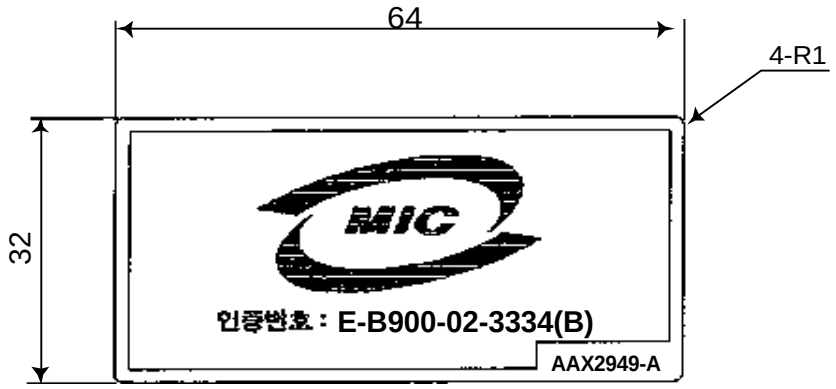

AAX2950

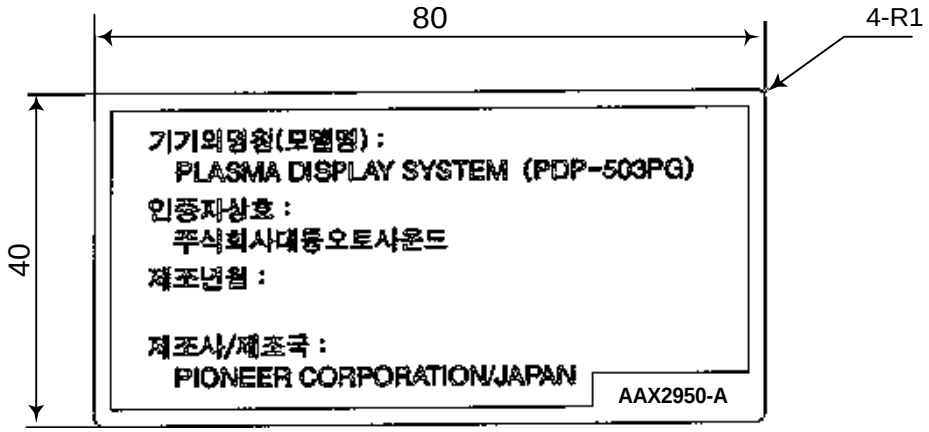

AAX2951

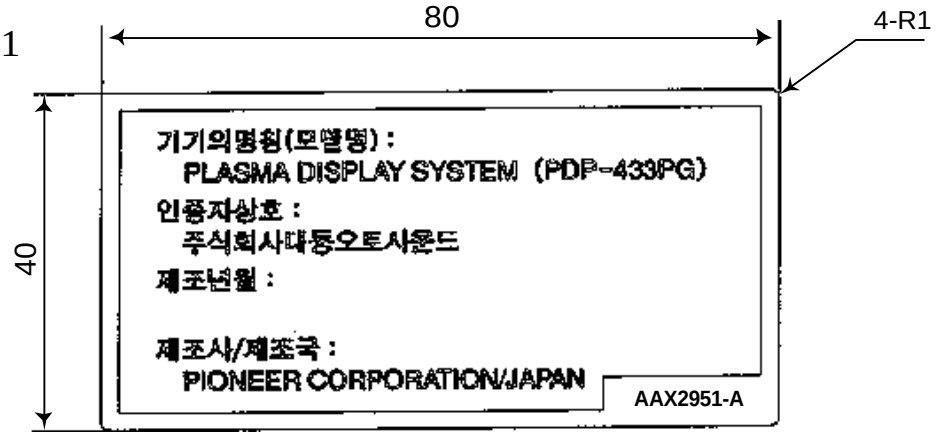

Pioneer

SERVICE INFORMATION

Date: Feb.21, 2003 **No.:** **SI-D03044** **(1/1)**

MODEL No.	*****	**SER.No.**	**S/M No.**	**PG**
PRO-700HD/KUXC/CA	A	R/C	ARP3013	
SD-641HD5/KUXC/CA	A	R/C	ARP3031	

	#	**CHANGE**
DETAIL	1	Change of CRT socket in R, G and B CRT DRIVE ASSY.
REASON	1	To prevent CRT socket from dew.

Ref		**CURRENT**	**PARTS**	**CO**	**NEW**	**PARTS**
*****	**#**	**SYMBOL/DESCRIPTION**	**PART NUMBER**	**DE**	**PART NUMBER**	**SYMBOL/DESCRIPTION**
A	1	CRT socket	AKG1005	1	AKG1006	CRT socket

PIONEER CORPORATION

K.MATUMURA ,MANAGER
DP
Technical Support Group
Service Support Division

NOTE:PARTS CODE
1;Changeable from old to new.
2:Not Interchangeable an all.
3:Interchangeable in both ways
5:Do not use old parts

Memo: SPC54-102 SY66
AA-D1285

Classify:

Pioneer

CORRECTION OF SERVICE MANUAL

Date: Feb.18, 2003 **No.:** **SI-D03043** **(1/1)**

MODEL No.	S/M No.	PG	MODEL No.	S/M No.	PG
PDP-433PE/WYVI6	ARP3111	45	PDP-433PU/KUC	ARP3111	45

Please correct your service manual

[OLD]

Sustain Waveforms

*** Sustain Waveform (1 sub-field)**

ch 1 : K3107(X.PSUS) - K3201(SUSGND)
V: 100V/div. H: 500microsec/div.

ch 2 : K2220(Y.PSUS) - K2219(SUSGND)
V: 100V/div. H: 500microsec/div.

[NEW]

Sustain Waveforms

*** Reset Waveform**

ch 1 : K3107(X.PSUS) - K3201(SUSGND)
V: 100V/div. H: 100microsec/div.

ch 2 : K2220(Y.PSUS) - K2219(SUSGND)
V: 100V/div. H: 100microsec/div.

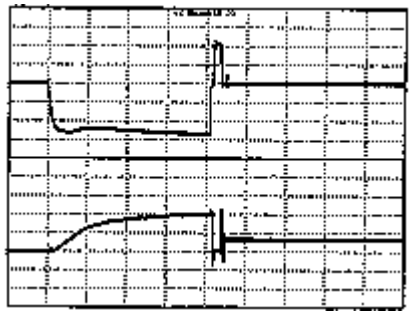

PIONEER CORPORATION

Memo: SY66

K.MATSUMURA ,MANAGER
DP
Technical Support Group
Service Support Division

Pioneer

CORRECTION OF SERVICE MANUAL

Date: Feb.10, 2003 **No.:** **SI-D03042** **(1/1)**

MODEL No.	S/M No.	PG	MODEL No.	S/M No.	PG
PRO-730HD/KUXC/CA	ARP3139	161	PRO-630HD/KUXC/CA	ARP3139	161
PRO-530HD/KUXC/CA	ARP3139	161			

Please correct your service manual

[OLD]

3.2 Confirmation of Convergence Data

The convergence coarse adjustment modes change cyclically, as shown below, with each press of the **INPUT4** key in FACTORY mode:

[NEW]

3.2 Confirmation of Convergence Data

The convergence coarse adjustment modes change cyclically, as shown below, with each press of the **DOT** key in FACTORY mode:

PIONEER CORPORATION

Memo: SY66

K.MATSUMURA ,MANAGER
DP
Technical Support Group
Service Support Division

Pioneer

SERVICE INFORMATION

Date: Apr.10, 2003 **No.:** **SI-D03041-A** **(1/2)**

MODEL No.	*	SER.No.	S/M No.	PG
PDP-503PE/WYVIO6	A	Please see the following page	ARP3107	
PDP-503PG/TLDPKBRO	A		ARP3117	
PDP-503PU/KUC	A		ARP3107	
PDP-503MXE/YVLDK	B		ARP3093	
PDP-503MXE-S/TA	B		ARP3120	
PDP-503CMX/LUCBO	B		ARP3093	
PDP-433PE/WYVIO6	C		ARP3111	
PDP-433PG/TLDPKBRO	C		ARP3118	
PDP-433PU/KUC	C		ARP3111	
PDP-433MXE/YVLDK	D		ARP3123	
PDP-433CMX/LUCBW	D		ARP3123	

	#	CHANGE
DETAIL	1	Created new X and Y Drive Assy
REASON	1	Changed the circuit to meet new Pulse Module, STK795-470

----- Please see the following page -----

Please dispose of the previous Service Information, **SI-D03041** issued on Feb.18, 2003.

Ref *	#	CURRENT SYMBOL/DESCRIPTION	PARTS PART NUMBER	CODE	NEW PART NUMBER	PARTS SYMBOL/DESCRIPTION
AB	1	X DRIVE ASSY	AWV1901	1	AWV1984	X DRIVE ASSY
CD	1	X DRIVE ASSY	AWV1930	1	AWV1985	X DRIVE ASSY
A	1	Y DRIVE ASSY	AWZ6707	1	AWZ6746	Y DRIVE ASSY
B	1	Y DRIVE ASSY	AWZ6645	1	AWZ6745	Y DRIVE ASSY
C	1	Y DRIVE ASSY	AWZ6708	1	AWZ6749	Y DRIVE ASSY
D	1	Y DRIVE ASSY	AWZ6683	1	AWZ6748	Y DRIVE ASSY

PIONEER CORPORATION
K.MATSUMURA ,MANAGER
DP
Technical Support Group
Service Support Division

NOTE:PARTS CODE
1;Changeable from old to new.
2:Not Interchangeable an all.
3:Interchangeable in both ways
5:Do not use old parts

Memo: AA-D4754 SY66
AA-D4755

Classify:

[Serial No. of new DRIVE ASSY]

MODEL	X DRIVE ASSY	Y DRIVE ASSY
PDP-503PE/WYVIO6	0003001-	0003001-
PDP-503PG/TLDPKBRO	0001821-	0001821-
PDP-503PU/KUC	0004591-	0004591-
PDP-503MXE/YVLDK	0007611-	0007611-
PDP-503MXE-S/TA	0000631-	0000631-
PDP-503CMX/LUCBO	0013671-	0013671-
PDP-433PE/WYVIO6	0001691-	0001691-
PDP-433PG/TLDPKBRO	0001861-	0001991-
PDP-433PU/KUC	0004531-	0004531-
PDP-433MXE/YVLDK	0003671-	0003901-
PDP-433CMX/LUCBW	0006121-	0006811-

[Notice]

It is not necessary to replace both X DRIVE ASSY and Y DRIVE ASSY at the same time.

It is impossible to replace a new part with an old part.

It is possible to replace an old part with a new part.
In this case, it is necessary to reset value of X-SUS-B ADJ or Y-SUS-B ADJ
in service factory mode using the remote control unit provided with the plasma display.
(Regarding the operations of service factory mode, see the service manual.)

1) 503 series
When you replace the DRIVE ASSY of 503 series, add 2 steps to the current value of SUS-B ADJ that correspond to the part you replace.

(e.g.1) When you replace X DRIVE ASSY and the current value of X-SUS-B ADJ is "08" reset the value to "10".
In this case, it is not necessary to reset the value of Y-SUS-B ADJ.

(e.g.2) When you replace Y DRIVE ASSY and the current value of Y-SUS-B ADJ is "08" reset the value to "10".
In this case, it is nor necessary to reset the value of X-SUB-B ADJ.

2) 433 series
When you replace the DRIVE ASSY of 433 series, add 1 step to the current value of SUS-B ADJ that correspond to the part you replace.

(e.g.1) When you replace X DRIVE ASSY and the current value of X-SUS-B ADJ is "08" reset the value to "09".
In this case, it is not necessary to reset the value of Y-SUS-B ADJ.

(e.g.2) When you replace Y DRIVE ASSY and the current value of Y-SUS-B ADJ is "08" reset the value to "09".
In this case, it is not necessary to reset the value of X-SUS-B ADJ.

Pioneer

SERVICE INFORMATION

Date: Feb.18, 2003 **No.:** **SI-D03041** **(1/2)**

MODEL No.	*****	**SER.No.**	**S/M No.**	**PG**
PDP-503PE/WYVIO6	A	Please see the following page	ARP3107	
PDP-503PG/TLDPKBRO	A		ARP3117	
PDP-503PU/KUC	A		ARP3107	
PDP-503MXE/YVLDK	B		ARP3093	
PDP-503MXE-S/TA	B		ARP3120	
PDP-503CMX/LUCBO	B		ARP3093	
PDP-433PE/WYVIO6	C		ARP3111	
PDP-433PG/TLDPKBRO	C		ARP3118	
PDP-433PU/KUC	C		ARP3111	
PDP-433MXE/YVLDK	D		ARP3123	
PDP-433CMX/LUCBW	D		ARP3123	

	#	**CHANGE**
DETAIL	1	Created new X and Y Drive Assy
REASON	1	Changed the circuit to meet new Pulse Module, STK795-470

--- Please see the following page ---

Ref *	**#**	**CURRENT SYMBOL/DESCRIPTION**	**PARTS PART NUMBER**	**CO DE**	**NEW PART NUMBER**	**PARTS SYMBOL/DESCRIPTION**
AB	1	X DRIVE ASSY	AWV1901	1	AWV1984	X DRIVE ASSY
CD	1	X DRIVE ASSY	AWV1930	1	AWV1985	X DRIVE ASSY
A	1	Y DRIVE ASSY	AWZ6707	1	AWZ6746	Y DRIVE ASSY
B	1	Y DRIVE ASSY	AWZ6645	1	AWZ6745	Y DRIVE ASSY
C	1	Y DRIVE ASSY	AWZ6708	1	AWZ6749	Y DRIVE ASSY
D	1	Y DRIVE ASSY	AWZ6683	1	AWZ6748	Y DRIVE ASSY

PIONEER CORPORATION

K.MATSUMURA ,MANAGER
DP
Technical Support Group
Service Support Division

NOTE:PARTS CODE
1;Changeable from old to new.
2:Not Interchangeable an all.
3:Interchangeable in both ways
5:Do not use old parts

Memo: AA-D4754 SY66
AA-D4755

Classify:

[Serial No. of new DRIVE ASSY]

MODEL	X DRIVE ASSY	Y DRIVE ASSY
PDP-503PE/WYVIO6	0003001-	0003001-
PDP-503PG/TLDPKBRO	0001821-	0001821-
PDP-503PU/KUC	0004591-	0004591-
PDP-503MXE/YVLDK	0007611-	0007611-
PDP-503MXE-S/TA	0000631-	0000631-
PDP-503CMX/LUCBO	0013671-	0013671-
PDP-433PE/WYVIO6	0001691-	0001691-
PDP-433PG/TLDPKBRO	0001861-	0001991-
PDP-433PU/KUC	0004531-	0004531-
PDP-433MXE/YVLDK	0003671-	0003901-
PDP-433CMX/LUCBW	0006121-	0006811-

[Notice]

It is not necessary to replace both X DRIVE ASSY and Y DRIVE ASSY at the same time.

It is impossible to replace a new part with an old part.

It is possible to replace an old part with a new part.
In this case, it is necessary to reset value of X-SUS-B ADJ or Y-SUS-B ADJ
in service factory mode using the remote control unit provided with the plasma display.
(Regarding the operations of service factory mode, see the service manual.)

1) 503 series
When you replace the DRIVE ASSY of 503 series, add 2 steps to the current value of SUS-B ADJ that correspond to the part you replace.
(e.g.) When you replace X DRIVE ASSY and the current value of X-SUS-B ADJ is "08", reset the value to "10".
In this case, it is not necessary to reset the value of Y-SUS-B ADJ.

2) 433 series
When you replace the DRIVE ASSY of 433 series, add 1 step to the current value of SUS-B ADJ that correspond to the part you replace.
(e.g.) When you replace X DRIVE ASSY and the current value of X-SUS-B ADJ is "08", reset the value to "09".
In this case, it is not necessary to reset the value of Y-SUS-B ADJ.

Pioneer

SERVICE INFORMATION

Date: Feb.10, 2003 **No.:** **SI-D03040** **(1/2)**

MODEL No.	*****	**SER.No.**	**S/M No.**	**PG**
PRO-530HD/KUXC/CA	A	R/C	ARP3138	
PRO-630HD/KUXC/CA	A	R/C	ARP3138	
PRO-730HD/KUXC/CA	A	R/C	ARP3138	

	#	**CHANGE**
DETAIL	1	Changed some parts on Video Ucom Assy, AWV1963 This information apply to Video Ucom Service Assy, AWV1992, also.
REASON	1	Improvement of productivity

---- Please see the parts locations in the schematic back of this page ----

Ref		**CURRENT**	**PARTS**	**CO**	**NEW**	**PARTS**
*****	**#**	**SYMBOL/DESCRIPTION**	**PART NUMBER**	**DE**	**PART NUMBER**	**SYMBOL/DESCRIPTION**
A	1	R5451	RD1/4PU331J	1	RS1/16S331J	R5451
A	1	CN1902	KM250MA9	-	Deleted	
A	1		Added	-	RS1/16S152J	R2937
A	1	R5452	RD1/4PU470J	-	Deleted	
A	1	R5453	RD1/4PU152J	-	Deleted	

PIONEER CORPORATION

K.MATUMURA ,MANAGER
DP
Technical Support Group
Service Support Division

NOTE:PARTS CODE
1;Changeable from old to new.
2:Not Interchangeable an all.
3:Interchangeable in both ways
5:Do not use old parts

Memo: AA-D4900 SY66
AA-D4880

Classify:

VIDEO UCOM ASS'Y

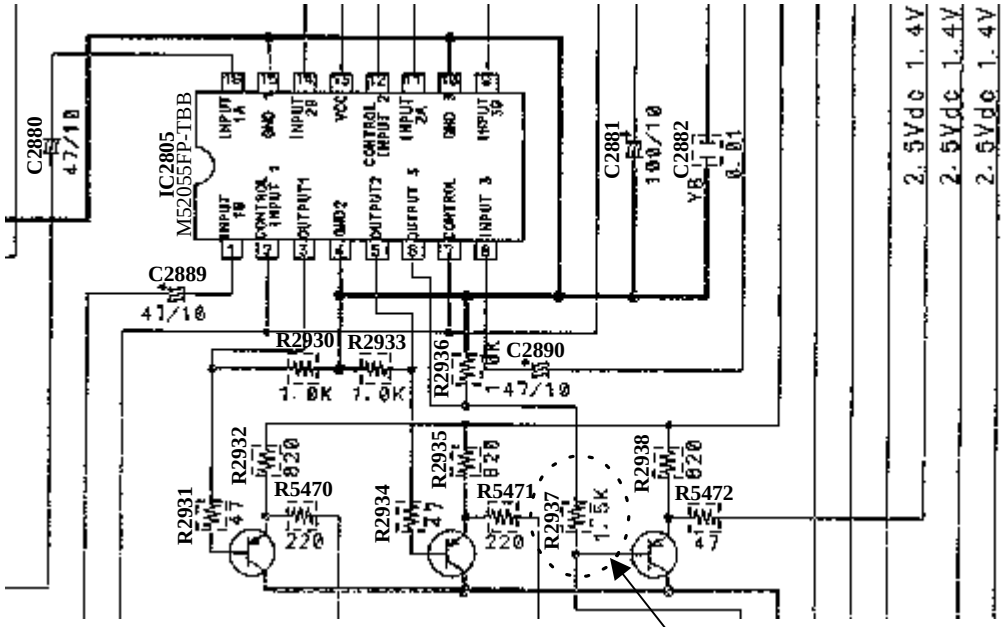

Added
R2937

Deleted
CN1902

VIDEO UCOM ASS'Y

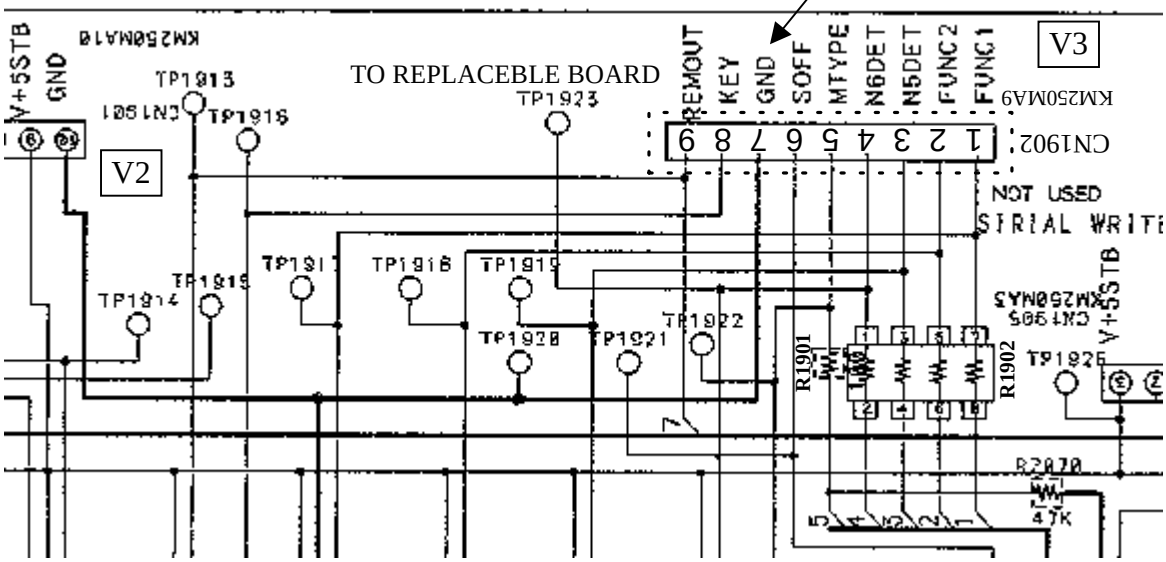

Pioneer

SERVICE INFORMATION

Date: Feb.10, 2003 **No.:** **SI-D03039** **(1/1)**

MODEL No.	*	SER.No.	S/M No.	PG
PRO-510HD/KUXC/CA	A	R/C	ARP3086	
PRO-610HD/KUXC/CA	A	R/C	ARP3086	
PRO-710HD/KUXC/CA	A	R/C	ARP3086	
SD-532HD5/KBXC	A	R/C	ARP3086	
SD-532HD5/KUXC/CA	A	R/C	ARP3086	
SD-582HD5/KUXC/CA	A	R/C	ARP3086	
PRO-520HD/KUXC/CA	A	R/C	ARP3086	
PRO-620HD/KUXC/CA	A	R/C	ARP3086	
PRO-720HD/KUXC/CA	A	R/C	ARP3086	

	#	CHANGE
DETAIL	1	Changed capacitors
REASON	1	Production convenience

[Detail] Changed capacitors, C5601 and C5602, on Video Assy

Model	Part number of Video Assy
PRO-510HD/KUXC/CA	AWV1799
PRO-610HD/KUXC/CA PRO-710HD/KUXC/CA	
SD-532HD5/KBXC SD-532HD5/KUXC/CA	AWV1804
SD-582HD5/KUXC/CA	
PRO-520HD/KUXC/CA	AWV1916
PRO-620HD/KUXC/CA PRO-720HD/KUXC/CA	

Ref *	#	CURRENT SYMBOL/DESCRIPTION	PARTS PART NUMBER	CODE	NEW PART NUMBER	PARTS SYMBOL/DESCRIPTION
A	1	C5601, C5602	CEAT101M10	1	CEANP101M10	C5601, C5602

PIONEER CORPORATION

K.MATSUMURA ,MANAGER
DP
Technical Support Group
Service Support Division

NOTE:PARTS CODE
1;Changeable from old to new.
2:Not Interchangeable an all.
3:Interchangeable in both ways
5:Do not use old parts

Memo: AA-D4871 SY66
SPC57-576

Classify:

Pioneer

CORRECTION OF SERVICE MANUAL

Date: Dec.12, 2002 **No.:** **SI-D03038** **(1/1)**

MODEL No.	S/M No.	PG	MODEL No.	S/M No.	PG
PDK-50HW2	ARP3109	7			

Please correct your service manual

[OLD]

CORTING SECTION PARTS LIST

Mark	No.	Description	Part No.	PG.
	1	Hexagon Nat	AZB1432	Page 7
	2	Nat	AZB1433	
	3	3P Assy	AZD1106	
	4	10P Assy	AZD1107	
	5	14P Assy	AZD1108	
	6	232C Assy	AZK1138	
	7	DC Assy	AZK1139	
	8	Frame (Lower)	AZN2418	
	9	Frame (Upper)	**AZN2419**	
	10	Frame (Right)	AZN2484	
	11	Frame (Left)	AZN2421	
	12	Escutcheon	AZN2422	
	13	Corner	AZN2423	
	14	Sensor Holder	AZN2425	
	15	Filter RC	AZN2426	

[NEW]

CORTING SECTION PARTS LIST

Mark	No.	Description	Part No.
	1	Hexagon Nat	AZB1432
	2	Nat	AZB1433
	3	3P Assy	AZD1106
	4	10P Assy	AZD1107
	5	14P Assy	AZD1108
	6	232C Assy	AZK1138
	7	DC Assy	AZK1139
	8	Frame (Lower)	AZN2418
	9	Frame (Upper)	**AZN2499**
	10	Frame (Right)	AZN2484
	11	Frame (Left)	AZN2421
	12	Escutcheon	AZN2422
	13	Corner	AZN2423
	14	Sensor Holder	AZN2425
	15	Filter RC	AZN2426

PIONEER CORPORATION

Memo: AA-D4272 SY66

K.MATSUMURA ,MANAGER
DP
Technical Support Group
Service Support Division

Pioneer

SERVICE INFORMATION

Date: Dec.11, 2002 **No.:** **SI-D03037** **(1/1)**

MODEL No.	*****	**SER.No.**	**S/M No.**	**PG**
PDP-503CMX/LUCBO	A	R/C	ARP3100	
PDP-503MXE/YVLDK	A	R/C	ARP3100	
PDP-503PE/WYVIO6	A	R/C	ARP3108	

	#	**CHANGE**
DETAIL	1	Change of DC-DC converter on Digital Video ASSY (AWV1903)

REASON	1	Production convenience

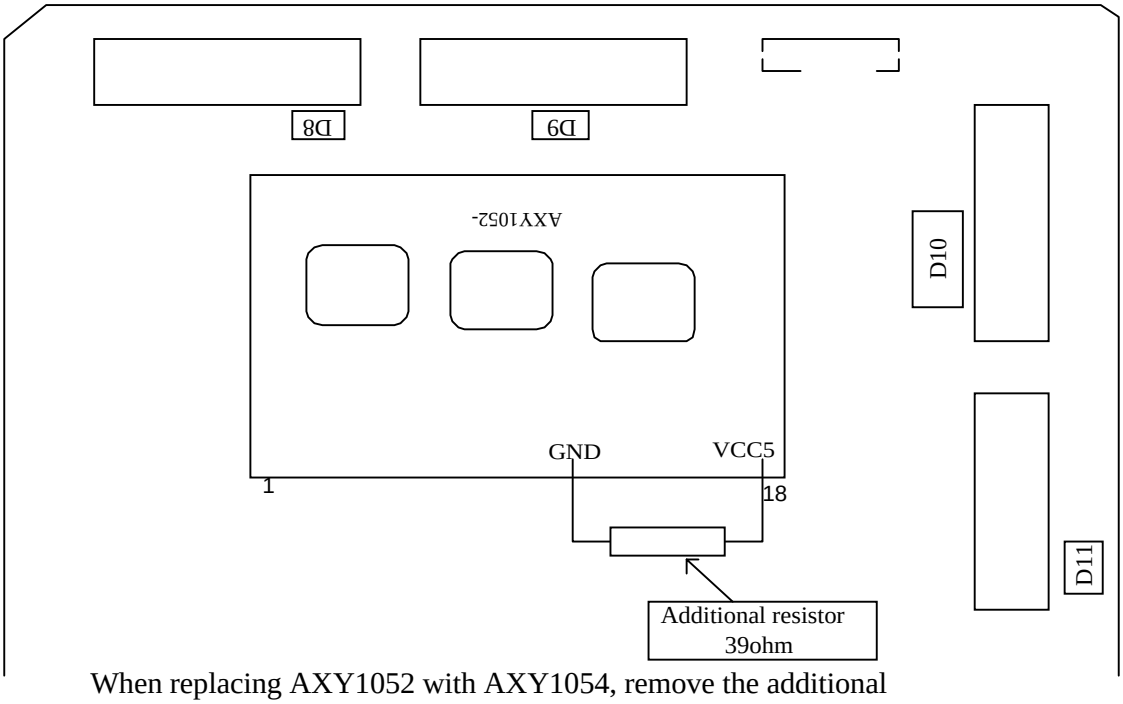

When replacing AXY1052 with AXY1054, remove the additional resistor (39 ohm) from Digital Video ASSY.
On the other hand, AXY1054 on Digital Video ASSY does not have the additional resistor.

Ref		**CURRENT**	**PARTS**	**CO**	**NEW**	**PARTS**
*****	**#**	**SYMBOL/DESCRIPTION**	**PART NUMBER**	**DE**	**PART NUMBER**	**SYMBOL/DESCRIPTION**
A	1	DC-DC converter	AXY1052	1	AXY1054	DC-DC converter

PIONEER CORPORATION

K.MATUMURA ,MANAGER
DP
Technical Support Group
Service Support Division

NOTE:PARTS CODE
1;Changeable from old to new.
2:Not Interchangeable an all.
3:Interchangeable in both ways
5:Do not use old parts

Memo: AA-D3802 SY66

Classify:

Pioneer

SERVICE INFORMATION

Date: Dec.11, 2002 **No.:** **SI-D03036** **(1/1)**

MODEL No.	*****	**SER.No.**	**S/M No.**	**PG**
PDP-503MXE/YVLDK	A	0006461-	ARP3093	
PDP-503MXE-S/TA	B	0000601-	ARP3120	
PDP-433MXE/YVLDK	C	0002851-	ARP3123	

	#	**CHANGE**
DETAIL	1	Change of RGB ASSY
	2	Change of the operating instructions

REASON	1,2	Design change

* Changed MAIN uCOM program in RGB ASSY
MAIN uCOM (IC5505) version 16 --> version 17
WIDE uCOM (IC5601) version 05 --> version 06

There is a silver sticker for distinction near the serial number of the performed UNIT.

* The operating instructions of PDP-503CMX/LUCBO changed twice.
No. ARE1360 --> ARE1361 --> ARE1365
ARC1503 --> ARC1506 --> ARC1510
1 2

Detail 1 : Common use for 43 inch and 50 inch model
Detail 2 : Design change (Not interchangeable)

Ref		**CURRENT**	**PARTS**	**CO**	**NEW**	**PARTS**
*****	**#**	**SYMBOL/DESCRIPTION**	**PART NUMBER**	**DE**	**PART NUMBER**	**SYMBOL/DESCRIPTION**
AB	1	RGB ASS'Y	AWZ6743	1	AWZ6744	RGB ASS'Y
C	1	RGB ASS'Y	AWZ6697	1	AWZ6744	RGB ASS'Y
AC	2	operating instructions	ARE1361	2	ARE1365	operating instructions
AC	2	operating instructions	ARC1506	2	ARC1510	operating instructions
B	2	operating instructions	ARC1507	2	ARC1511	operating instructions

PIONEER CORPORATION
K.MATSUMURA ,MANAGER
DP
Technical Support Group
Service Support Division

NOTE:PARTS CODE
1;Changeable from old to new.
2:Not Interchangeable an all.
3:Interchangeable in both ways
5:Do not use old parts

Memo: AA-D4143 SY66
AA-D4568

Classify:

Pioneer

SERVICE INFORMATION

Date: Dec.6, 2002 **No.:** **SI-D03035** **(1/2)**

MODEL No.	*	SER.No.	S/M No.	PG
PDP-503CMX/LUCBO	A	0011071-	ARP3093	
PDP-503MXE-S/TA	A	0000601-	ARP3120	
PDP-503MXE/YVLDK	A	0006361-	ARP3093	
PDP-503PE/WYVIO6	A	0002801-	ARP3107	
PDP-503PG/TLDPKBRO	A	0001341-	ARP3117	
PDP-503PU/KUC	A	0003711-	ARP3107	
PDP-433CMX/LUCBW	A	0004721-	ARP3123	
PDP-433MXE/YVLDK	A	0003151-	ARP3123	
PDP-433PE/WYVIO6	A	0001551-	ARP3111	
PDP-433PG/TLDPKBRO	A	0001451-	ARP3118	
PDP-433PU/KUC	A	0004431-	ARP3111	

	#	CHANGE
DETAIL	1	Added the anti-vibration sheet C (AEC1927).
REASON	1	Prevent vibration between switch holder and front chassis.

Please see the next page about the added position of anti-vibration sheet.

Ref *	#	CURRENT SYMBOL/DESCRIPTION	PARTS PART NUMBER	CO DE	NEW PART NUMBER	PARTS SYMBOL/DESCRIPTION
A	1		Added	-	AEC1927	Anti-Vibration Sheet C

PIONEER CORPORATION

K.MATSUMURA ,MANAGER
DP
Technical Support Group
Service Support Division

NOTE:PARTS CODE
1;Changeable from old to new.
2:Not Interchangeable an all.
3:Interchangeable in both ways
5:Do not use old parts

Memo: SPC57-370 SY66
AA-D4652

Classify:

The position of the added sheet

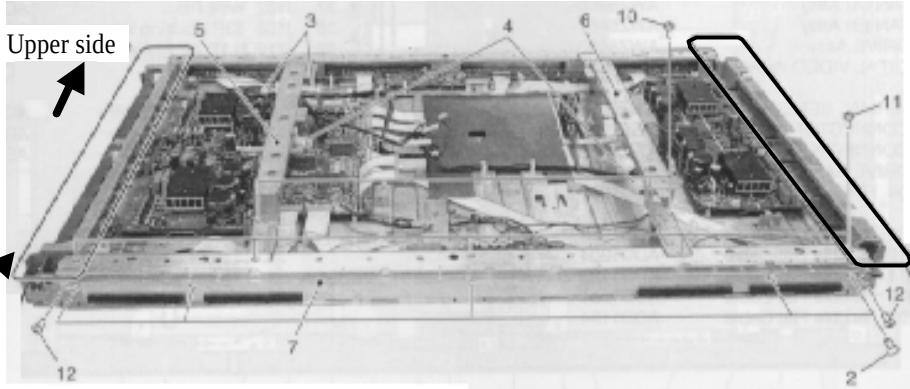

Please do not put the sheet on this chassis.

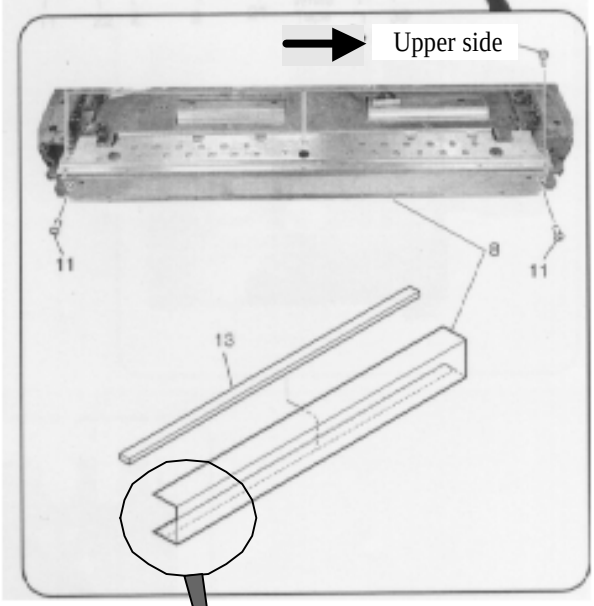

Front chassis V
(ANA1661: for 50inch)
(ANA1672 : for 43inch)

< Enlargement >

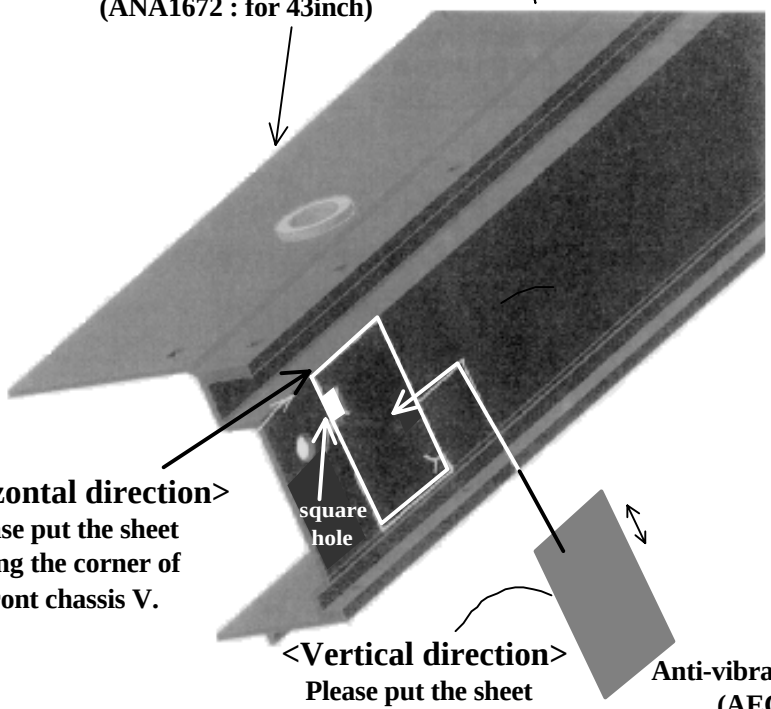

<Horizontal direction>
Please put the sheet along the corner of front chassis V.

<Vertical direction>
Please put the sheet to the edge of square hole.

Anti-vibration sheet C
(AEC1927)

Pioneer

CORRECTION OF SERVICE MANUAL

Date: Dec.3, 2002 **No.:** **SI-D03034** **(1/1)**

MODEL No.	S/M No.	PG	MODEL No.	S/M No.	PG
RM-V2500NAS/LU/CA	ARP3130	2			

Please correct your service manual

[OLD]

CONTRAST TABLE

Ref.No.	Mark	Symbol and Description	Part No. RM-V2500NA /LU/CA	Part No. RM-V2500NAS /LU/CA	Remarks
		EXTERIOR BLOCK			
	NSP	NAME PLATE	AAL2302	AAL2410	
	NSP	UPC Code Label	AAX2704	AAX2916	
		CRT BLOCK			
P6-107	*	CRT SERVICE ASSY (R)	BWY1014	**AWY1375**	
	NSP	└ CRT ASSY (R)	BWL1006	AWL1373	
P6-108	*	CRT SERVICE ASSY (G)	BWY1015	AWY1373	
	NSP	└ CRT ASSY (G)	BWL1014	AWL1374	
P6-109	*	CRT SERVICE ASSY (B)	BWY1016	AWY1374	
	NSP	└ CRT ASSY (B)	BWL1008	AWL1375	
		TUBE	Not used	BDN1001	

[NEW]

CONTRAST TABLE

Ref.No.	Mark	Symbol and Description	Part No. RM-V2500NA /LU/CA	Part No. RM-V2500NAS /LU/CA	Remarks
		EXTERIOR BLOCK			
	NSP	NAME PLATE	AAL2302	AAL2410	
	NSP	UPC Code Label	AAX2704	AAX2916	
		CRT BLOCK			
P6-107	*	CRT SERVICE ASSY (R)	BWY1014	**AWY1372**	
	NSP	└ CRT ASSY (R)	BWL1006	AWL1373	
P6-108	*	CRT SERVICE ASSY (G)	BWY1015	AWY1373	
	NSP	└ CRT ASSY (G)	BWL1014	AWL1374	
P6-109	*	CRT SERVICE ASSY (B)	BWY1016	AWY1374	
	NSP	└ CRT ASSY (B)	BWL1008	AWL1375	
		TUBE	Not used	BDN1001	

PIONEER CORPORATION

Memo: DS-29836 SY66

K.MATSUMURA ,MANAGER
DP
Technical Support Group
Service Support Division

Pioneer

SERVICE INFORMATION

Date: Nov.20, 2002 **No.:** **SI-D03033-G** **(1/5)**

MODEL No. * **SER.No.** **S/M No.** **PG**

See to following page

	#	DETAIL
SYMPTOM	1	The power goes off.
CAUSE	1	Short circuit of Capacitors (C6716 or C6718) in the address resonance ASSY.
SERVICE REMEDY	1	Please see the following.
FACTORY COUNTER -MEASURE	1	Same as the Service Remedy.

Service Remedy

1-a "When you repair the PDP at your service bench"

Prepare an insulated tube and white silicon bonding.
Remove C6716 and C6718.
Set a new capacitor, ACE1162. Refer to the procedure of the next page.
Perform same things to both upper and lower Address Resonance Assy.

1-b "When you repair the PDP on site"

Replace both upper and lower Address Resonance Assy with new Assy

	Old	New
50 inch	AWZ6691	AWZ6750
43 inch	AWZ6682	AWZ6751

2 Put insulated sheet on both upper and lower panel chassis. Refer to the exploded views.
And furthermore, if the PDP you are fixing is an industrial model, put insulated sheet on RGB Base also.

3 Put a green sticker on the right side of serial number.

Ref *	#	CURRENT SYMBOL/DESCRIPTION	PARTS PART NUMBER	CODE	NEW PART NUMBER	PARTS SYMBOL/DESCRIPTION
A	1	address resonance ASSY	AWZ6691	5	AWZ6750	address resonance ASSY
B	1	address resonance ASSY	AWZ6682	5	AWZ6751	address resonance ASSY
AB	1		Added	-	AMR3343	insulated sheet
AB	1	capacitor	ACE1159	5	ACE1162	capacitor

PIONEER CORPORATION

K.MATSUMURA ,MANAGER
DP
Technical Support Group
Service Support Division

NOTE:PARTS CODE
1:Changeable from old to new.
2:Not Interchangeable an all.
3:Interchangeable in both ways
5:Do not use old parts

Memo: AA-D4747 SY66
AA-D4749
AA-D4774

Classify:

MODEL No.	*	SER.No.	S/M No.	PG
PDP-503CMX/LUCBO	A	0011321-	ARP3093	
PDP-503MXE/YVLDK	A	0006681-	ARP3093	
PDP-503PE/WYVI6	A	0002971-	ARP3107	
PDP-503PG/TLDPKBR	A	0001341-	ARP3117	
PDP-503PU/KUC	A	0003971-	ARP3107	
PDP-503MXE-S/TA	A	0000601-	ARP3120	
PDP-433CMX/LUCBW	B	0004761-	ARP3123	
PDP-433MXE/YVLDK	B	0003241-	ARP3123	
PDP-433PE/WYVI6	B	0001601-	ARP3111	
PDP-433PG/TLDPKBR	B	0001451-	ARP3118	
PDP-433PU/KUC	B	0004431-	ARP3111	

Procedure how to set a new capacitor

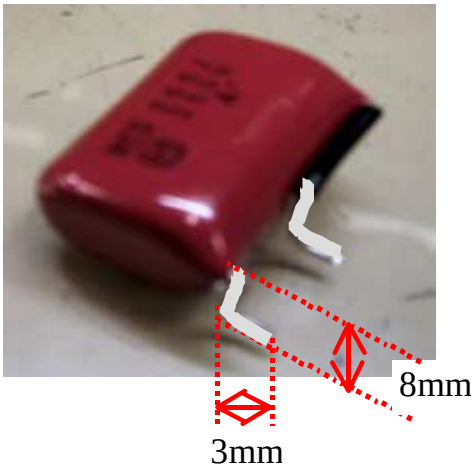

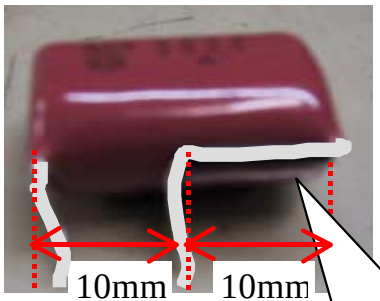

Prevent electrical contact using an insulated tube.

Solder the capacitor on the lands of C6716.

Keep distance of 5 millimeters between the capacitor and a coil, L6704

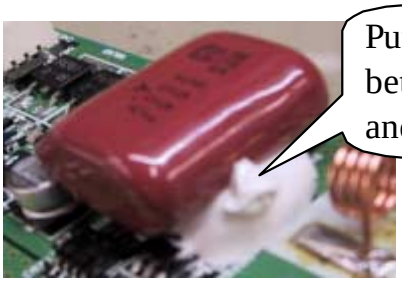

Put white silicon bonding between the capacitor and board.

Confirm printed number
WFS 205J
250V

Exploded view of Panel chassis

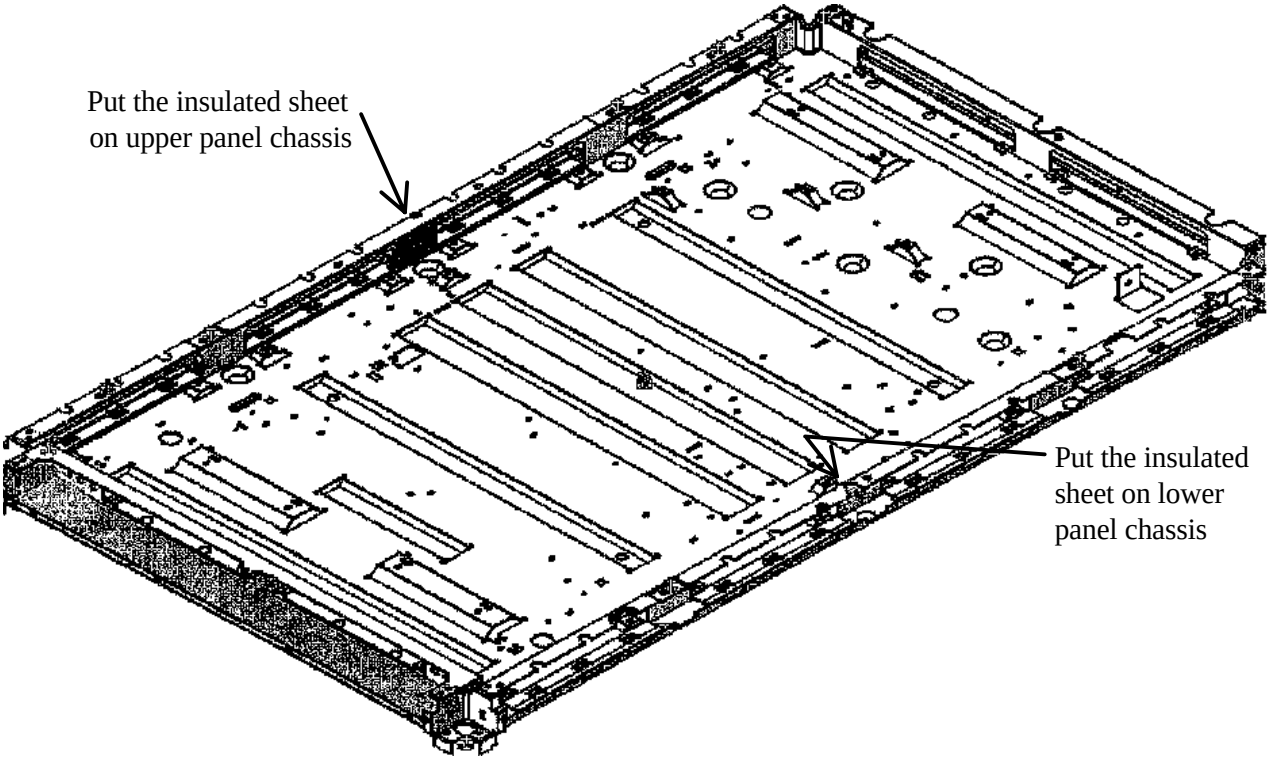

Enlargement

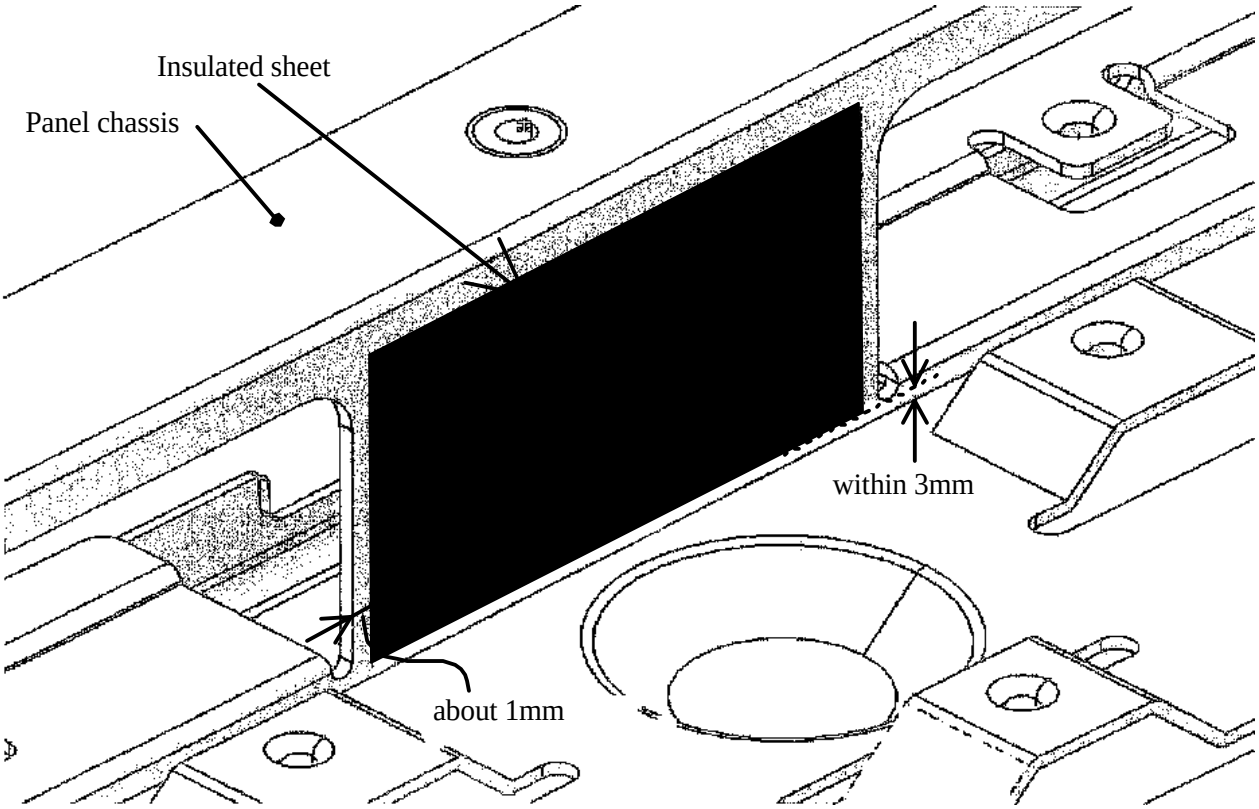

Insulated sheet position on RGB Board

< Exploded view of RGB base >

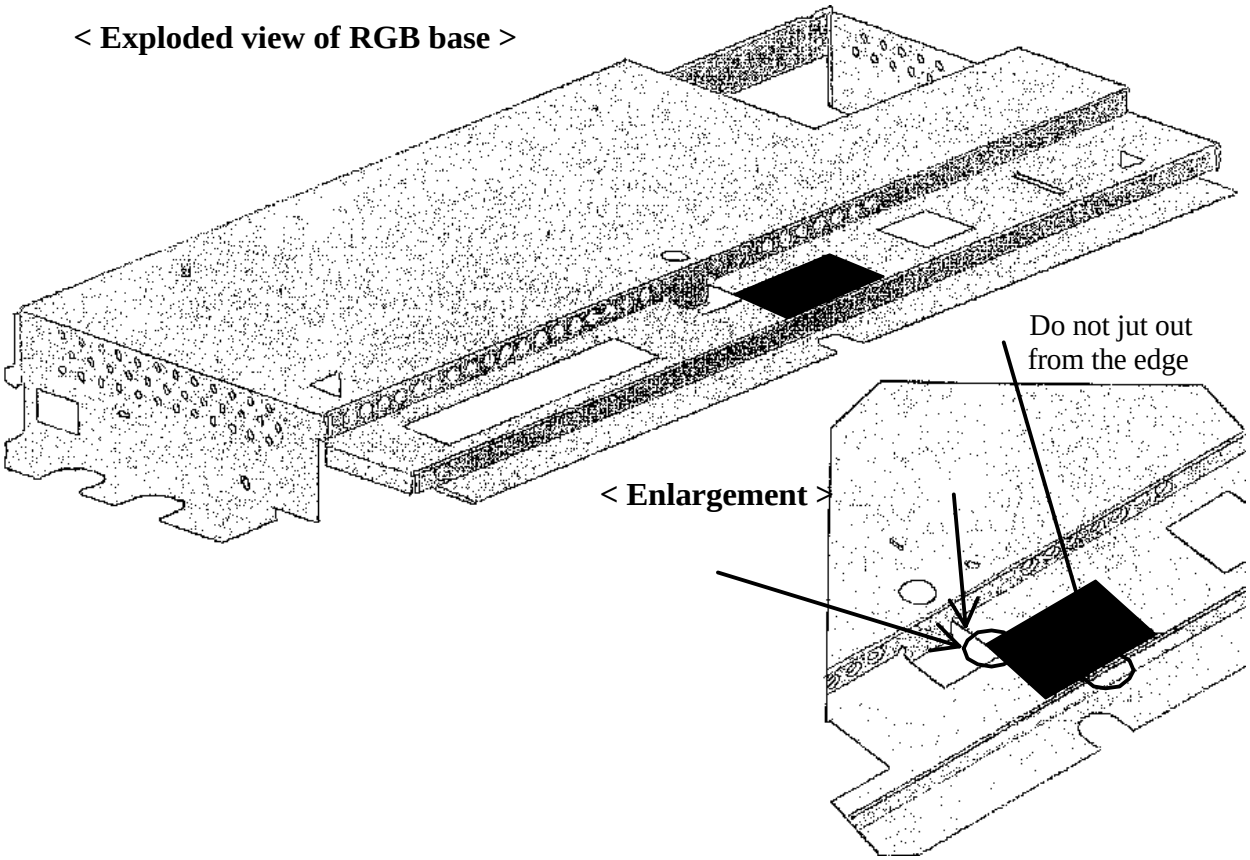

The picture of disassembled RGB base

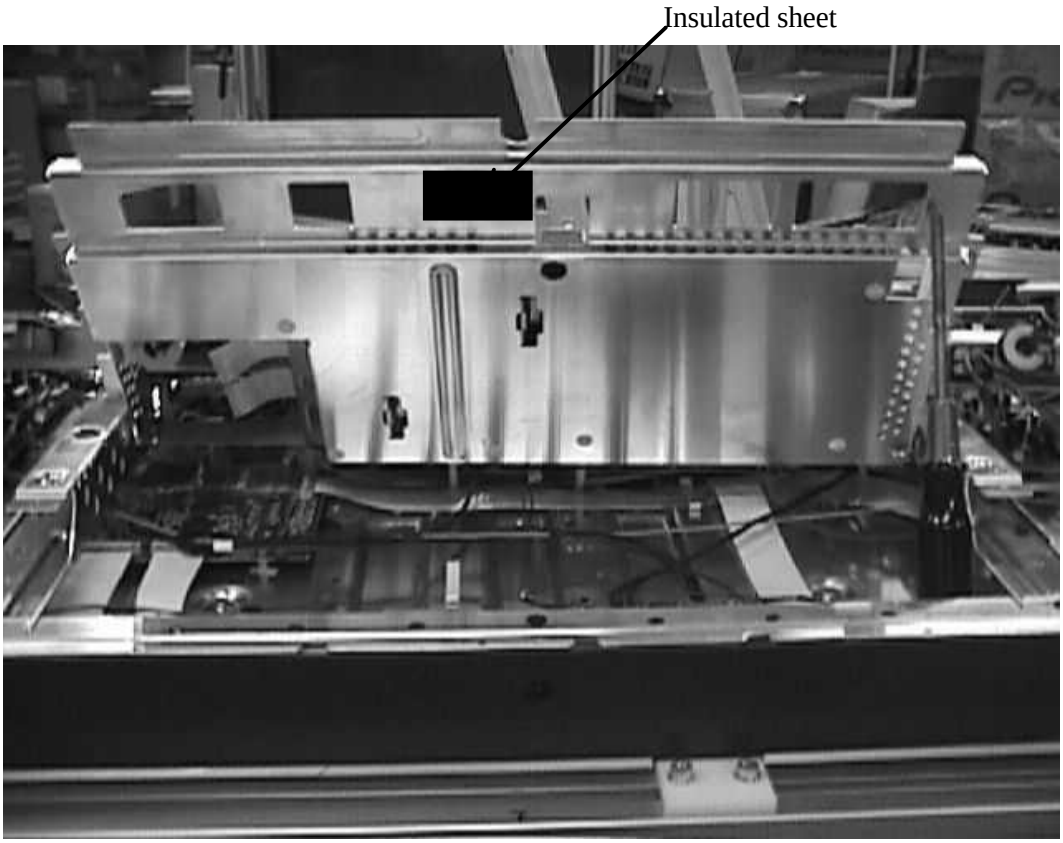

Pioneer

CORRECTION OF SERVICE MANUAL

Date: Oct.11, 2002 **No.:** **SI-D03032** **(1/1)**

MODEL No.	**S/M No.**	**PG**	**MODEL No.**	**S/M No.**	**PG**
PDP-S10-LR/WL	ARP3136				

Please correct your service manual

Front Page

[OLD]

Type	Model		Power Requirement	Remarks
	PDP-610MX	PDP-S10-LR		
KUC/CA	○	-	AC120V	
WY	-	○	-	

[NEW]

Type	Model		Power Requirement	Remarks
	PDP-610MX	PDP-S10-LR		
KUC/CA	○	-	AC120V	
WL	-	○	-	

Page 3

[OLD]

■ **CONTRAST TABLE**

PDP-S10-LR/ **WY** and PX-61XM1U-S1 are constructed the same except for the following :

Symbol	Mark	Symbol and Description	Part No.		Remarks
			PX-61XM1U-S1	PDP-S10-LR/ **WY**	
		MECHANISM PARTS			
M01		Net Assy	029BS0151	029BS0191	
M02		Cabinet Assy	029BS0161	029BS0201	
M03		Baffle Assy	029BS0171	029BS0211	
		PRINTED & PACKING MATERIALS			
P01		User's Manual	07S800381	07S800691	
P08-1		Carton Box	029M00191	029MS2131	

[NEW]

■ **CONTRAST TABLE**

PDP-S10-LR/ **WL** and PX-61XM1U-S1 are constructed the same except for the following :

Symbol	Mark	Symbol and Description	Part No.		Remarks
			PX-61XM1U-S1	PDP-S10-LR/ **WL**	
		MECHANISM PARTS			
M01		Net Assy	029BS0151	029BS0191	
M02		Cabinet Assy	029BS0161	029BS0201	
M03		Baffle Assy	029BS0171	029BS0211	
		PRINTED & PACKING MATERIALS			
P01		User's Manual	07S800381	07S800691	
P08-1		Carton Box	029M00191	029MS2131	

PIONEER CORPORATION

Memo: SI02-T10 SY66

K.MATSUMURA ,MANAGER
DP
Technical Support Group
Service Support Division

Pioneer

SERVICE INFORMATION

Date: Oct.3, 2002 **No.:** **SI-D03031** **(1/1)**

MODEL No.	*****	**SER.No.**	**S/M No.**	**PG**
PRO-1000HD/LUXC/CA	A	R/C	ARP3093	

	#	**CHANGE**
DETAIL	1	Change Instruction Manual
REASON	1	Because a new I/M which includes PRO-800HD/LUXC/CA instructions was issued, I/M for PRO-1000HD/LUXC/CA was changed to the new one.

Ref		**CURRENT**	**PARTS**	**CO**	**NEW**	**PARTS**
*****	**#**	**SYMBOL/DESCRIPTION**	**PART NUMBER**	**DE**	**PART NUMBER**	**SYMBOL/DESCRIPTION**
A	1	Instruction Manual	ARB1544		ARB1548	Instruction Manual

PIONEER CORPORATION

K.MATUMURA ,MANAGER
DP
Technical Support Group
Service Support Division

NOTE:PARTS CODE
1;Changeable from old to new.
2:Not Interchangeable an all.
3:Interchangeable in both ways
5:Do not use old parts

Memo: SPC57-149 SY66
AA-D4460

Classify:

Pioneer

SERVICE INFORMATION

Date: Oct.2, 2002 **No.:** **SI-D03030** **(1/2)**

MODEL No.	*****	**SER.No.**	**S/M No.**	**PG**
SD-533HD5/KBXC	A	R/C	ARP3094	
SD-533HD5/KUXC/CA	A	R/C	ARP3094	
SD-643HD5/KUXC/CA	A	R/C	ARP3094	

	#	**CHANGE**
DETAIL	1	Addition of capacitor in DEFLECTION ASSY
REASON	1	To prevent occurrence of defective Q502 due to electric discharge.

---- Please see the parts locations in the schematic back of this page ----

Ref *	**#**	**CURRENT SYMBOL/DESCRIPTION**	**PARTS PART NUMBER**	**CO DE**	**NEW PART NUMBER**	**PARTS SYMBOL/DESCRIPTION**
A	1		Added	-	CKCYF103Z50	C0550

PIONEER CORPORATION

K.MATUMURA ,MANAGER
DP
Technical Support Group
Service Support Division

NOTE:PARTS CODE
1;Changeable from old to new.
2:Not Interchangeable an all.
3:Interchangeable in both ways
5:Do not use old parts

Memo: SPC56-545 SY66
AA-D4109

Classify:

DEFLECTION SERVICE ASSY

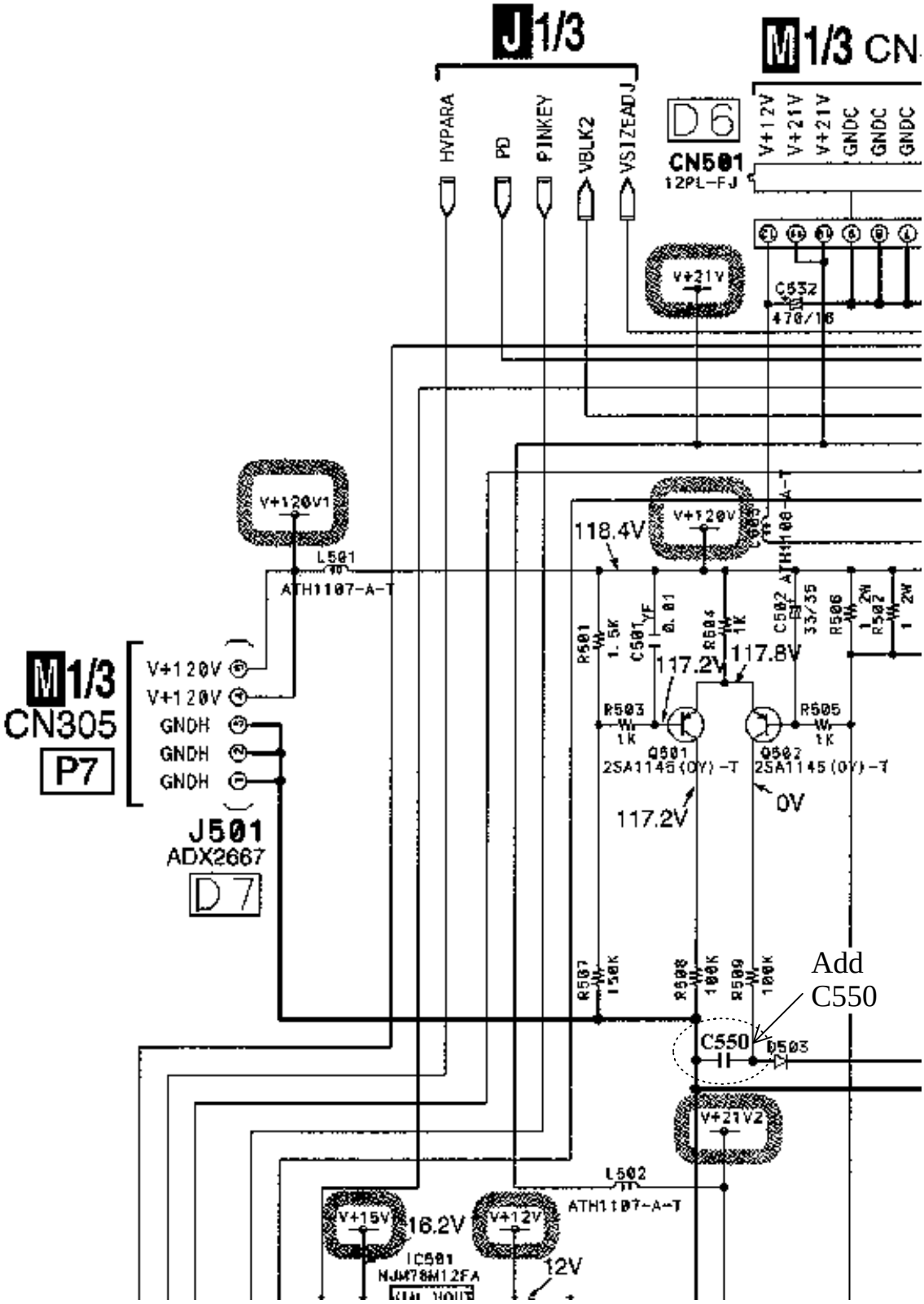

Pioneer

SERVICE INFORMATION

Date: Oct.1, 2002 **No.:** **SI-D03029** **(1/2)**

MODEL No.	*	SER.No.	S/M No.	PG
PRO-510HD/KUXC/CA	A	R/C	ARP3086	
PRO-610HD/KUXC/CA	A	R/C	ARP3086	
PRO-710HD/KUXC/CA	A	R/C	ARP3086	
SD-532HD5/KBXC	A	R/C	ARP3086	
SD-532HD5/KUXC/CA	A	R/C	ARP3086	
SD-582HD5/KUXC/CA	A	R/C	ARP3086	
PRO-520HD/KUXC/CA	A	R/C	ARP3095	
PRO-620HD/KUXC/CA	A	R/C	ARP3096	
PRO-720HD/KUXC/CA	A	R/C	ARP3097	

	#	CHANGE
DETAIL	1	Addition of capacitors in DEFLECTION ASSY
REASON	1	To prevent occurrence of defective Q316 due to electric discharge.

---- Please see the parts locations in the schematic back of this page ----

Ref *	#	CURRENT SYMBOL/DESCRIPTION	PARTS PART NUMBER	CO DE	NEW PART NUMBER	PARTS SYMBOL/DESCRIPTION
A	1		Added	-	CKCYF103Z50	C0362, C0640

PIONEER CORPORATION

K.MATSUMURA ,MANAGER
DP
Technical Support Group
Service Support Division

NOTE:PARTS CODE
1;Changeable from old to new.
2:Not Interchangeable an all.
3:Interchangeable in both ways
5:Do not use old parts

Memo: SPC56-544 SY66
AA-D4108

Classify:

DEFLECTION ASSY

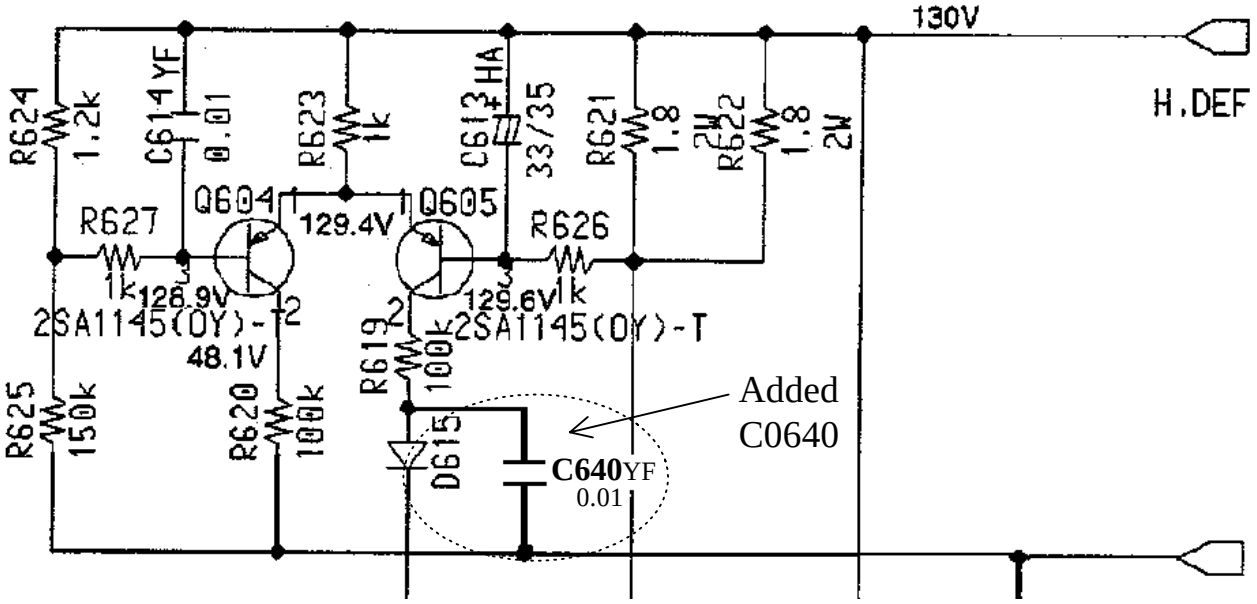

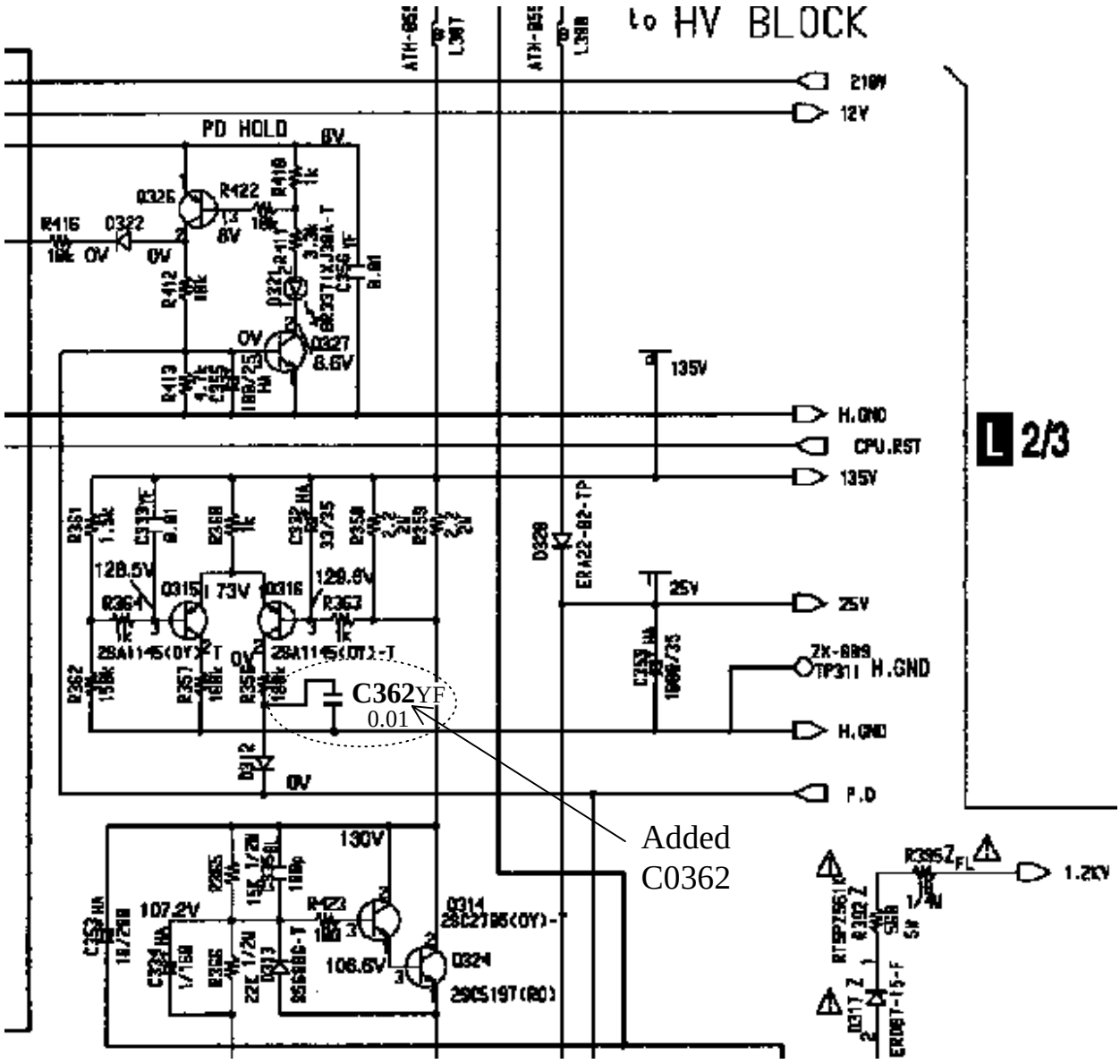

Pioneer

SERVICE INFORMATION

Date: Sep.27, 2002 **No.:** **SI-D03028** **(1/1)**

MODEL No.	*	**SER.No.**	**S/M No.**	**PG**
SD-533HD5/KBXC	A	R/C	ARP3094	
SD-533HD5/KUXC/CA	A	R/C	ARP3094	
SD-643HD5/KUXC/CA	A	R/C	ARP3094	

	#	**CHANGE**
DETAIL	1	Additon of capaitor in SIGNAL Assy (AWV1891)

REASON	1	Reduce crosstalk

SYNC DET BLOCK

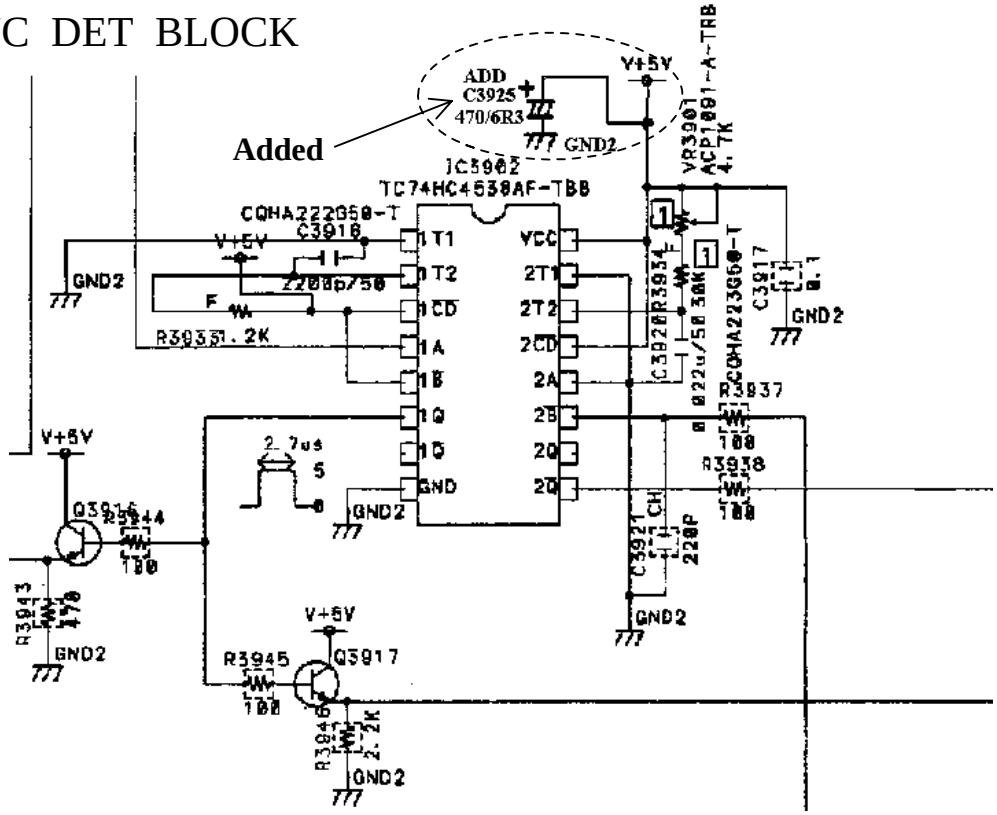

Ref *	#	**CURRENT SYMBOL/DESCRIPTION**	**PARTS PART NUMBER**	**CO DE**	**NEW PART NUMBER**	**PARTS SYMBOL/DESCRIPTION**
A	1		Added	-	CEAT471M6R3	C3925

PIONEER CORPORATION

K.MATUMURA ,MANAGER
DP
Technical Support Group
Service Support Division

NOTE:PARTS CODE
1;Changeable from old to new.
2:Not Interchangeable an all.
3:Interchangeable in both ways
5:Do not use old parts

Memo: SPC57-108 SY66
AA-D4397

Classify:

Pioneer

SERVICE INFORMATION

Date: Sep.26, 2002 **No.:** **SI-D03027** **(1/3)**

MODEL No. * **SER.No.** **S/M No.** **PG**

See to following page

	#	CHANGE
DETAIL	1	Change of parts in Y DRIVE ASSY
REASON	1	Production convenience

----Please see the parts locations in the schematic back of this page ----

Ref *	#	CURRENT SYMBOL/DESCRIPTION	PARTS PART NUMBER	CO DE	NEW PART NUMBER	PARTS SYMBOL/DESCRIPTION
A	1	IC2503	TC74ACT540FT	-	Deleted	
A	1	IC2516, IC2525	HCPL-M611	-	Deleted	
A	1	R2508	RS1/16S101J	-	Deleted	
A	1	R2525, R2551	RS1/16S471J	-	Deleted	
A	1	R2552, R2569	RS1/16S102J	-	Deleted	
A	1	C2504, C2519, C2530	CKSRYF104Z50	-	Deleted	
A	1		Added	-	RS1/16S0R0J	R2530, R2531
A	1		Added	-	RS1/16101J	R2578

PIONEER CORPORATION

K.MATSUMURA ,MANAGER
DP
Technical Support Group
Service Support Division

NOTE:PARTS CODE
1;Changeable from old to new.
2:Not Interchangeable an all.
3:Interchangeable in both ways
5:Do not use old parts

Memo: SPC57-097 SY66
AA-D4292

Classify:

MODEL No.	*	SER.No.	S/M No.	PG
PDP-503PE/WYVIO6	A	R/C	ARP3108	
PDP-503PG/TLDPKBRO	A	R/C	ARP3117	
PDP-503PU/KUC	A	R/C	ARP3108	
PDP-503PE/WYVI6XK	A	R/C	ARP3108	
PDP-503CMX/LUCBO	A	R/C	ARP3100	
PRO-1000HD/LUXC/CA	A	R/C	ARP3100	
PDP-503MXE-S/TA	A	R/C	ARP3120	
PDP-503MXE/YVLDK	A	R/C	ARP3100	
PDU-50WX2/TUCYV	A	R/C	ARP3115	
PDP-433PE/WYVIO6	A	R/C	ARP3112	
PDP-433PG/TLDPKBRO	A	R/C	ARP3118	
PDP-433PU/KUC	A	R/C	ARP3112	
PDP-433PE/WYVI6XK	A	R/C	ARP3112	
PDP-433CMX/LUCBW	A	R/C	ARP3124	
PRO-800HD/LUXC/CA	A	R/C	ARP3124	
PDP-433MXE/YVLDK	A	R/C	ARP3124	

Y DRIVE ASS'Y SCAN BLOCK

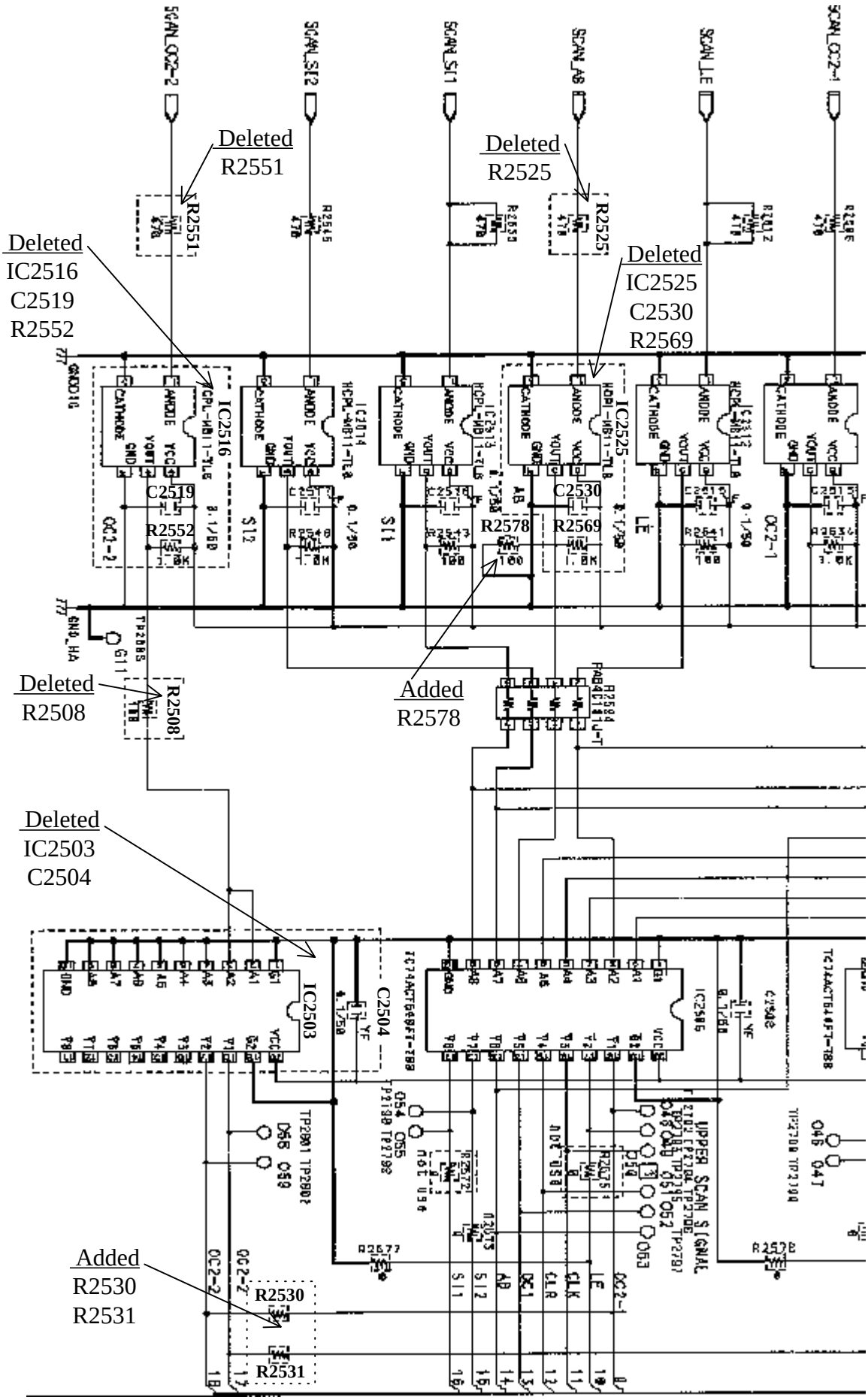

Pioneer

SERVICE INFORMATION

Date: Sep.19, 2002 **No.:** **SI-D03026** **(1/4)**

MODEL No. * **SER.No.** **S/M No.** **PG**

See to following page

	#	CHANGE
DETAIL	1	Changes method of VSUS adjustment and SUSB adjustment after replacing a service panel. (Changes VSUS data to VSUS voltage)
REASON	1	To be able to perform the above adjustments even if using either a new power supply ASSY (common use for 43 inch and 50 inch) or an old one to a service panel.

Ref *	#	CURRENT SYMBOL/DESCRIPTION	PARTS PART NUMBER	CO DE	NEW PART NUMBER	PARTS SYMBOL/DESCRIPTION

PIONEER CORPORATION

K.MATSUMURA ,MANAGER
DP
Technical Support Group
Service Support Division

NOTE:PARTS CODE
1;Changeable from old to new.
2:Not Interchangeable an all.
3:Interchangeable in both ways
5:Do not use old parts

Memo: SY66

Classify:

MODEL No.	*	SER.No.	S/M No.	PG
PDP-503PE/WYVIO6	A		ARP3107	
PDP-503PG/TLDPKBRO	A		ARP3117	
PDP-503PU/KUC	A		ARP3107	
PDP-503PC/TAXQ	A		ARP3134	
PDP-503PE/WYVI6XK	A		ARP3107	
PDP-503CMX/LUCBO	A		ARP3093	
PRO-1000HD/LUXC/CA	A		ARP3093	
PDP-503MXE-S/TA	A		ARP3120	
PDP-503MXE/YVLDK	A		ARP3093	
PDU-50WX2/TUCYV	A		ARP3114	
PDP-433PE/WYVIO6	A		ARP3111	
PDP-433PG/TLDPKBRO	A		ARP3118	
PDP-433PU/KUC	A		ARP3111	
PDP-433PE/WYVI6XK	A		ARP3111	
PDP-433CMX/LUCBW	A		ARP3123	
PRO-800HD/LUXC/CA	A		ARP3123	
PDP-433MXE/YVLDK	A		ARP3123	
PDU-43WX2/TUCYV	A		ARP3121	

Adjustment procedure for Service Panel ASSY

● Preparation

1. Checking white sticker on a service panel

Confirm which of the following stickers is stuck on the service panel ASSY

A	B	C	D
VSUS = 204 VOFS = 129 XSUSB = 08 YSUSB = 09	VSUS = 204 VOFS = 129	VSUS = 230(V) VOFS = 129 XSUSB = 08 YSUSB = 09	VSUS = 230(V) VOFS = 129

2. Checking Power Supply ASSY on the repaired PDP

Referring part number and the following information, confirm which type of the power supply board is used onto the service panel ASSY.

A new type of Power Supply ASSY: AXY1059 (common use for 43 inch and 50 inch model)
An old type of Power Supply ASSY: AXY1056 (for 43 inch model use)
An old type of Power Supply ASSY: AXY1051, AXY1053, AXY1053, AXY1055 (for 50 inch model use)

● Adjustment method

1. VSUS adjustment

i) If the white sticker on the panel is type A or B (VSUS data value on the sticker is an old data)

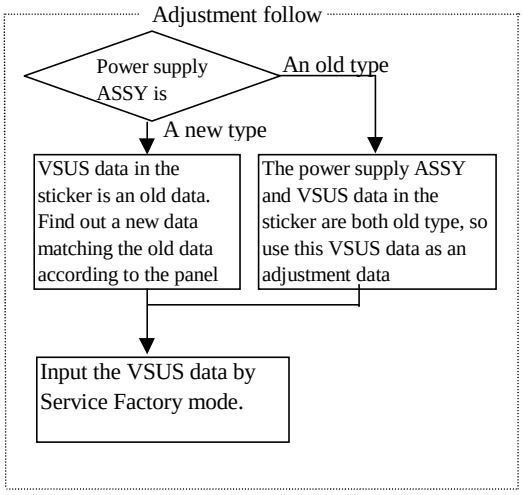

e.g. When VSUS=204 and a unit is 50 inch

1: Because the unit is 50 inch, checking old data for 50 inch.
2: If power supply ASSY is a new type ->It is necessary to input a new data, therefore adjustment value in this case is VSUS200.
2': If power supply ASSY is an old type ->The VSUS data is also an old data, therefore adjustment value in this case is VSUS204.

VSUS(V)	VSUS data value		
Voltage	New data (for new Power Supply use)	Old data (for 433P & old Power Supply)	Old data (for 503P & old Power Supply)
234	VSUS187	VSUS199	VSUS185
235	VSUS192	VSUS204	VSUS192
236	VSUS196	VSUS209	VSUS198
237	VSUS200	VSUS214	VSUS204
238	VSUS204	VSUS219	VSUS211

ii) If the white sticker on the panel is type C or D (VSUS data value on the sticker is voltage)

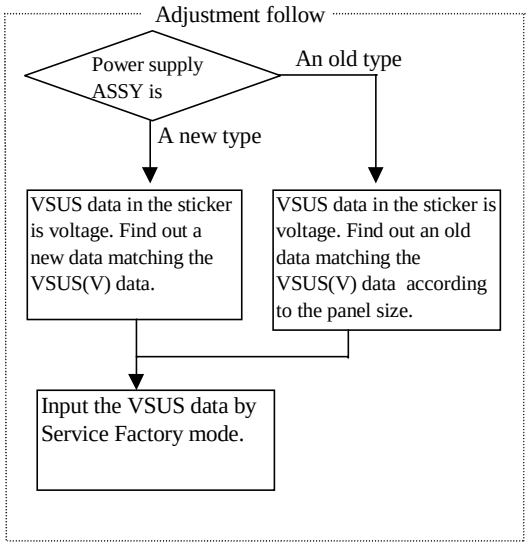

e.g. When VSUS=230(V) and a unit is 43 i

1: Because VSUS(V) data is voltage, checking "230" in the VSUS(V) line of the conversion table.
2: If power Supply ASSY is a new type ->It is necessary to input a new data, therefore adjustment value in this case is VSUS170.
2': If power supply ASSY is an old type -> It is necessary to input an old data, therefore adjustment value in this case is VSUS179.

VSUS(V)	VSUS data value		
Voltage	New data (for new Power Supply use)	Old data (for 433P & old Power Supply)	Old data (for 503P & old Power Supply)
227	VSUS158	VSUS164	VSUS141
228	VSUS162	VSUS169	VSUS147
229	VSUS166	VSUS174	VSUS153
230	VSUS170	VSUS179	VSUS160
231	VSUS175	VSUS184	VSUS166

2. X-SUSB, Y-SUSB Adjustment

i) If the white sticker on the panel is type A or C
(There is X-SUSB data and Y-SUSB data in the sticker.)

Adjust to the printed X-SUSB and Y-SUSB in the sticker by service factory mode.

NOTE: If there is no dark cells with no adjustment, the panel is within tolerance range of this adjustment. However the printed X-SUSB and Y-SUSB data is the proper value of the service panel. Therefore please perform this adjustment

ii) If the white sticker on the panel is type A or C
(There is no X-SUSB and Y-SUSB data in the sticker)

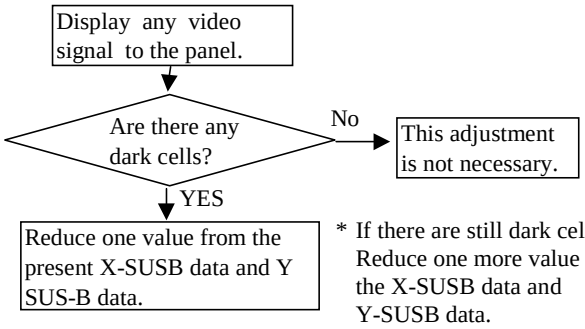

* If there are still dark cells, Reduce one more value of the X-SUSB data and Y-SUSB data.

3. Panel Sequence Upgrading of Digital Video ASSY (only PDP-433PU and 433PE.)

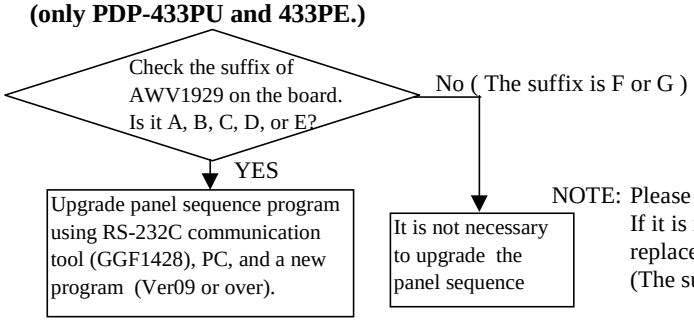

NOTE: Please refer another SI "Procedure for panel sequence upgrade ". If it is impossible to upgrade it due to no jig or no program, replace the Digital Video Assy with a new one or AWV1941. (The suffix of a new AWV1929 is F)

<VSUS data Conversion Table>

VSUS(V)	VSUS data value		
Voltage	New data (for new Power Supply use)	Old data (for 433P & old Power Supply)	Old data (for 503P & old Power Supply)
190	VSUS000	None	None
191	VSUS004	None	None
192	VSUS009	None	None
193	VSUS013	None	None
194	VSUS017	None	None
195	VSUS021	VSUS000	None
196	VSUS026	VSUS005	None
197	VSUS030	VSUS010	None
198	VSUS034	VSUS015	None
199	VSUS038	VSUS020	None
200	VSUS043	VSUS026	None
201	VSUS047	VSUS031	None
202	VSUS051	VSUS036	None
203	VSUS055	VSUS041	None
204	VSUS060	VSUS046	None
205	VSUS064	VSUS051	VSUS000
206	VSUS068	VSUS056	VSUS006
207	VSUS073	VSUS061	VSUS013
208	VSUS077	VSUS067	VSUS019
209	VSUS081	VSUS072	VSUS026
210	VSUS085	VSUS077	VSUS032
211	VSUS090	VSUS082	VSUS038
212	VSUS094	VSUS087	VSUS045
213	VSUS098	VSUS092	VSUS051
214	VSUS102	VSUS097	VSUS058
215	VSUS107	VSUS102	VSUS064
216	VSUS111	VSUS108	VSUS070
217	VSUS115	VSUS113	VSUS077
218	VSUS119	VSUS118	VSUS083
219	VSUS124	VSUS123	VSUS090
220	VSUS128	VSUS128	VSUS096

VSUS(V)	VSUS data value		
Voltage	New data (for new Power Supply use)	Old data (for 433P & old Power Supply)	Old data (for 503P & old Power Supply)
221	VSUS132	VSUS133	VSUS102
222	VSUS136	VSUS138	VSUS109
223	VSUS141	VSUS143	VSUS115
224	VSUS145	VSUS148	VSUS122
225	VSUS149	VSUS153	VSUS128
226	VSUS153	VSUS158	VSUS134
227	VSUS158	VSUS164	VSUS141
228	VSUS162	VSUS169	VSUS147
229	VSUS166	VSUS174	VSUS153
230	VSUS170	VSUS179	VSUS160
231	VSUS175	VSUS184	VSUS166
232	VSUS179	VSUS189	VSUS172
233	VSUS183	VSUS194	VSUS179
234	VSUS187	VSUS199	VSUS185
235	VSUS192	VSUS204	VSUS192
236	VSUS196	VSUS209	VSUS198
237	VSUS200	VSUS214	VSUS204
238	VSUS204	VSUS219	VSUS211
239	VSUS208	VSUS225	VSUS217
240	VSUS213	VSUS230	VSUS223
241	VSUS217	VSUS235	VSUS230
242	VSUS221	VSUS240	VSUS236
243	VSUS225	VSUS245	VSUS242
244	VSUS230	VSUS250	VSUS249
245	VSUS234	VSUS255	VSUS255
246	VSUS238	None	None
247	VSUS242	None	None
248	VSUS247	None	None
249	VSUS251	None	None
250	VSUS255	None	None

Pioneer

SERVICE INFORMATION

Date: Jan.30, 2003 **No.:** **SI-D03025-C** **(1/3)**

MODEL No.	*****	**SER.No.**	**S/M No.**	**PG**
PDP-503PE/WYVIO6	A	0002751-	ARP3107	
PDP-503PG/TLDPKBRO	A	0001101-	ARP3117	
PDP-503PU/KUC	A	0003051-	ARP3107	
PDP-503CMX/LUCBO	A	0009991-	ARP3093	
PDP-503MXE-S/TA	A	0000601-	ARP3120	
PDP-503MXE/YVLDK	A	0005591-	ARP3093	
PDP-433PE/WYVIO6	B	0001551-	ARP3111	
PDP-433PG/TLDPKBRO	B	0001341-	ARP3118	
PDP-433PU/KUC	B	0003811-	ARP3111	
PDP-433CMX/LUCBW	B	0005011-	ARP3123	
PDP-433MXE/YVLDK	B	0002931-	ARP3123	

	#	**CHANGE**
DETAIL	1	Change of SCAN IC
	1	Change of DIGITAL VIDEO ASS'Y due to change of SCAN IC
	1	Change of Service Panel ASS'Y due to change of SCAN IC
REASON	1	Production convenience

---- Please see the following page ----

Please dispose of the previous Service Information, **SI-D03025-B**issued on Dec.6, 2002.

Ref		**CURRENT**	**PARTS**	**CO**	**NEW**	**PARTS**
*****	**#**	**SYMBOL/DESCRIPTION**	**PART NUMBER**	**DE**	**PART NUMBER**	**SYMBOL/DESCRIPTION**
A	1	SCAN IC	SN755860PJ	2	SN755864APZP	SCAN IC
A	1	DIGITAL VIDEO ASS'Y	AWV1903	2	AWV1970	DIGITAL VIDEO ASS'Y
A	1	Service Panel ASS'Y 503	AWU1040	1	AWU1068	Service Panel ASS'Y 503
B	1	SCAN IC	SN755860PJ	2	SN755864APZP	SCAN IC
B	1	DIGITAL VIDEO ASS'Y	AWV1941	2	AWV1971	DIGITAL VIDEO ASS'Y
B	1	Service Panel ASS'Y 433	AWU1043	1	AWU1069	Service Panel ASS'Y 433

PIONEER CORPORATION

K.MATSUMURA ,MANAGER
DP
Technical Support Group
Service Support Division

NOTE:PARTS CODE
1;Changeable from old to new.
2:Not Interchangeable an all.
3:Interchangeable in both ways
5:Do not use old parts

Memo: AA-D4416 D4417
D4427 D4428
D4495 D4497
D4572

Classify: SY66

There is No compatibility between the old part and the new part individually. Please follow the below instruction when repairing the product with old parts.

- Scan IC replacement :

Both old (SN755860PJ) and new scan IC (SN755864APZP) are available as part. Replace with the appropriate scan IC according to the part number of the actual Scan IC on the repairing unit.

- Service Panel Assy :

When the new Service panel ASSY (AWU1068/AWU1069) is installed instead of the old service panel ASSY (AWU1040/AWU1043), it is essential to perform either of the following measure together with the replacement of the panel.

1) Replace the D.Video assy from old part (AWV1903/AWV1929/AWV1941) to new part (AWV1970/AWV1971)

2) Modify the scan sequence program of the D.Video assy. Detail of this method is described in the Document **SK-D03002**

- D.Video Assy :

Both old (AWV1903/AWV1929/AWV1941) and new (AWV1970/AWV1971) D.Video assys are available as part. Replace with the appropriate D.Video assy according to the type of the Panel assy installed on the actual repairing unit. Alternatively confirm the Part number and the labelling on the D.Video assy as described in the document **SK-D03002**

Note

* New scan IC and old scan IC are physically different.
* When Old Panel assy is used together with the new D.Video assy or vice versa, abnormal whitish light emission will appear on the screen. In this case, turn off the power and confirm if the correct pair of D.Video assy and Panel assy is used. This whitish abnormal screen is caused due to un-match of scan sequence and it restores when correct pair of D.Video assy and Panel assy is used.

Parts List

MODEL No.	Serial No.	SCAN IC	Digital Video ASSY	Service Panel ASSY 503
PDP-503PE/WYVIO6	0000001-0002750	SN755860PJ	AWV1903	AWU1040
	0002751-	SN755864APZP	AWV1970	AWU1068
PDP-503PG/TLDPKBRO	0000001-0001100	SN755860PJ	AWV1903	AWU1040
	0001101-	SN755864APZP	AWV1970	AWU1068
PDP-503PU/KUC	0000001-0003050	SN755860PJ	AWV1903	AWU1040
	0003051-	SN755864APZP	AWV1970	AWU1068
PDP-503CMX/LUCBO	0000001-0009990	SN755860PJ	AWV1903	AWU1040
	0009991-	SN755864APZP	AWV1970	AWU1068
PDP-503MXE-S/TA	0000001-0000600	SN755860PJ	AWV1903	AWU1040
	0000601-	SN755864APZP	AWV1970	AWU1068
PDP-503MXE/YVLDK	0000001-0005590	SN755860PJ	AWV1903	AWU1040
	0005591-	SN755864APZP	AWV1970	AWU1068

MODEL No.	Serial No.	SCAN IC	Digital Video ASSY	Service Panel ASSY 433
PDP-433PE/WYVIO6	0000001-0001550	SN755860PJ	AWV1929 AWV1941 AWV1980	AWU1043
	0001551-	SN755864APZP	AWV1971	AWU1069
PDP-433PG/TLDPKBRO	0000001-0001340	SN755860PJ	AWV1929 AWV1941 AWV1980	AWU1043
	0001341-	SN755864APZP	AWV1971	AWU1069
PDP-433PU/KUC	0000001-0003810	SN755860PJ	AWV1929 AWV1941 AWV1980	AWU1043
	0003811-	SN755864APZP	AWV1971	AWU1069
PDP-433CMX/LUCBW	0000001-0005010	SN755860PJ	AWV1941 AWV1980	AWU1043
	0005011-	SN755864APZP	AWV1971	AWU1069
PDP-433MXE/YVLDK	0000001-0002930	SN755860PJ	AWV1941 AWV1980	AWU1043
	0002931-	SN755864APZP	AWV1971	AWU1069

Pioneer

SERVICE INFORMATION

Date: Dec.6, 2002 **No.:** **SI-D03025-B** **(1/2)**

MODEL No.	*****	**SER.No.**	**S/M No.**	**PG**
PDP-503PE/WYVIO6	A	0002751-	ARP3107	
PDP-503PG/TLDPKBRO	A	0001101-	ARP3117	
PDP-503PU/KUC	A	0003051-	ARP3107	
PDP-503CMX/LUCBO	A	0009991-	ARP3093	
PDP-503MXE-S/TA	A	0000601-	ARP3120	
PDP-503MXE/YVLDK	A	0005591-	ARP3093	
PDP-433PE/WYVIO6	B	0001551-	ARP3111	
PDP-433PG/TLDPKBRO	B	0001341-	ARP3118	
PDP-433PU/KUC	B	0003811-	ARP3111	
PDP-433CMX/LUCBW	B	0005011-	ARP3123	
PDP-433MXE/YVLDK	B	0002931-	ARP3123	

	#	**CHANGE**
DETAIL	1	Change of SCAN IC
	1	Change of DIGITAL VIDEO ASS'Y due to change of SCAN IC
	1	Change of Service Panel ASS'Y due to change of SCAN IC
REASON	1	Production convenience

---- Please see the following page ----

Please dispose of the previous Service Information, **SI-D03025-A**issued on Oct.9, 2002.

Ref		**CURRENT**	**PARTS**	**CO**	**NEW**	**PARTS**
*****	**#**	**SYMBOL/DESCRIPTION**	**PART NUMBER**	**DE**	**PART NUMBER**	**SYMBOL/DESCRIPTION**
A	1	SCAN IC	SN755860PJ	2	SN755864APZP	SCAN IC
A	1	DIGITAL VIDEO ASS'Y	AWV1903	2	AWV1970	DIGITAL VIDEO ASS'Y
A	1	Service Panel ASS'Y 503	AWU1040	1	AWU1068	Service Panel ASS'Y 503
B	1	SCAN IC	SN755860PJ	2	SN755864APZP	SCAN IC
B	1	DIGITAL VIDEO ASS'Y	AWV1941	2	AWV1971	DIGITAL VIDEO ASS'Y
B	1	Service Panel ASS'Y 433	AWU1043	1	AWU1069	Service Panel ASS'Y 433

PIONEER CORPORATION

K.MATSUMURA ,MANAGER
DP
Service Engineering Section
Service Division

NOTE:PARTS CODE
1;Changeable from old to new.
2:Not Interchangeable an all.
3:Interchangeable in both ways
5:Do not use old parts

Memo: AA-D4416 D4417
D4427 D4428
D4495 D4497
D4572

Classify: SY66

NOTE 1 : In the above listed models, there is no interchangeability between new parts and old ones. Therefore please confirm serial number of a unit or a part number of the Digital Video ASSY firstly, and then use proper part for the unit.

NOTE 2 : If new service panel ASSY (AWU1070/AWU1071) is used instead of the old service panel ASSY (AWU1040/AWU1043), DIGITAL VIDEO ASSY should be replaced with the new part at the same time.

NOTE 3 : DIGITAL VIDEO ASSY for PDP-433P series had been changed from AWV1929 to AWV1941 during the production, therefore AWV1929 is one of the old parts.

Parts List

MODEL No.	Serial No.	SCAN IC	Digital Video ASSY	Service Panel ASSY 503
PDP-503PE/WYVIO6	0000001-0002750	SN755860PJ	AWV1903	AWU1040
	0002751-	SN755864APZP	AWV1970	AWU1068
PDP-503PG/TLDPKBRO	0000001-0001100	SN755860PJ	AWV1903	AWU1040
	0001101-	SN755864APZP	AWV1970	AWU1068
PDP-503PU/KUC	0000001-0003050	SN755860PJ	AWV1903	AWU1040
	0003051-	SN755864APZP	AWV1970	AWU1068
PDP-503CMX/LUCBO	0000001-0009990	SN755860PJ	AWV1903	AWU1040
	0009991-	SN755864APZP	AWV1970	AWU1068
PDP-503MXE-S/TA	0000001-0000600	SN755860PJ	AWV1903	AWU1040
	0000601-	SN755864APZP	AWV1970	AWU1068
PDP-503MXE/YVLDK	0000001-0005590	SN755860PJ	AWV1903	AWU1040
	0005591-	SN755864APZP	AWV1970	AWU1068

MODEL No.	Serial No.	SCAN IC	Digital Video ASSY	Service Panel ASSY 433
PDP-433PE/WYVIO6	0000001-0001550	SN755860PJ	AWV1929 AWV1941	AWU1043
	0001551-	SN755864APZP	AWV1971	AWU1069
PDP-433PG/TLDPKBRO	0000001-0001250	SN755860PJ	AWV1929 AWV1941	AWU1043
	0001251-	SN755864APZP	AWV1971	AWU1069
PDP-433PU/KUC	0000001-0003180	SN755860PJ	AWV1929 AWV1941	AWU1043
	0003181-	SN755864APZP	AWV1971	AWU1069
PDP-433CMX/LUCBW	0000001-0004310	SN755860PJ	AWV1941	AWU1043
	0004311-	SN755864APZP	AWV1971	AWU1069
PDP-433MXE/YVLDK	0000001-0002520	SN755860PJ	AWV1941	AWU1043
	0002521-	SN755864APZP	AWV1971	AWU1069

Pioneer

SERVICE INFORMATION

Date: Oct.9, 2002 **No.:** **SI-D03025-A** **(1/2)**

MODEL No.	*****	**SER.No.**	**S/M No.**	**PG**
PDP-503PE/WYVIO6	A	0002751-	ARP3107	
PDP-503PG/TLDPKBRO	A	0001101-	ARP3117	
PDP-503PU/KUC	A	0003051-	ARP3107	
PDP-503CMX/LUCBO	A	0009991-	ARP3093	
PDP-503MXE-S/TA	A	0000601-	ARP3120	
PDP-503MXE/YVLDK	A	0005591-	ARP3093	
PDP-433PE/WYVIO6	B	0001551-	ARP3111	
PDP-433PG/TLDPKBRO	B	0001341-	ARP3118	
PDP-433PU/KUC	B	0003811-	ARP3111	
PDP-433CMX/LUCBW	B	0005011-	ARP3123	
PDP-433MXE/YVLDK	B	0002931-	ARP3123	

	#	**CHANGE**
DETAIL	1	Change of SCAN IC
	1	Change of DIGITAL VIDEO ASS'Y due to change of SCAN IC
	1	Change of Service Panel ASS'Y due to change of SCAN IC
REASON	1	Production convenience

---- Please see the following page ----

Please dispose of the previous Service Information, **SI-D03025** issued on Sep.19, 2002.

Ref		**CURRENT**	**PARTS**	**CO**	**NEW**	**PARTS**
*****	**#**	**SYMBOL/DESCRIPTION**	**PART NUMBER**	**DE**	**PART NUMBER**	**SYMBOL/DESCRIPTION**
A	1	SCAN IC	SN755860PJ	1	SN755864APZP	SCAN IC
A	1	DIGITAL VIDEO ASS'Y	AWV1903	1	AWV1970	DIGITAL VIDEO ASS'Y
A	1	Service Panel ASS'Y 503	AWU1040	2	AWU1068	Service Panel ASS'Y 503
B	1	SCAN IC	SN755860PJ	1	SN755864APZP	SCAN IC
B	1	DIGITAL VIDEO ASS'Y	AWV1941	1	AWV1971	DIGITAL VIDEO ASS'Y
B	1	Service Panel ASS'Y 433	AWU1043	2	AWU1069	Service Panel ASS'Y 433

PIONEER CORPORATION

K.MATSUMURA ,MANAGER
DP
Service Engineering Section
Service Division

NOTE:PARTS CODE
1;Changeable from old to new.
2:Not Interchangeable an all.
3:Interchangeable in both ways
5:Do not use old parts

Memo: AA-D4416 D4417
D4427 D4428
D4495 D4497
D4572

Classify: SY66

NOTE 1 : In the above listed models, there is no interchangeability between new parts and old ones. Therefore please confirm serial number of a unit or a part number of the Digital Video ASSY firstly, and then use proper part for the unit.

NOTE 2 : If new service panel ASSY (AWU1070/AWU1071) is used instead of the old service panel ASSY (AWU1040/AWU1043), DIGITAL VIDEO ASSY should be replaced with the new part at the same time.

NOTE 3 : DIGITAL VIDEO ASSY for PDP-433P series had been changed from AWV1929 to AWV1941 during the production, therefore AWV1929 is one of the old parts.

Parts List

MODEL No.	Serial No.	SCAN IC	Digital Video ASSY	Service Panel ASSY 503
PDP-503PE/WYVIO6	0000001-0002750	SN755860PJ	AWV1903	AWU1040
	0002751-	SN755864APZP	AWV1970	AWU1068
PDP-503PG/TLDPKBRO	0000001-0001100	SN755860PJ	AWV1903	AWU1040
	0001101-	SN755864APZP	AWV1970	AWU1068
PDP-503PU/KUC	0000001-0003050	SN755860PJ	AWV1903	AWU1040
	0003051-	SN755864APZP	AWV1970	AWU1068
PDP-503CMX/LUCBO	0000001-0009990	SN755860PJ	AWV1903	AWU1040
	0009991-	SN755864APZP	AWV1970	AWU1068
PDP-503MXE-S/TA	0000001-0000600	SN755860PJ	AWV1903	AWU1040
	0000601-	SN755864APZP	AWV1970	AWU1068
PDP-503MXE/YVLDK	0000001-0005590	SN755860PJ	AWV1903	AWU1040
	0005591-	SN755864APZP	AWV1970	AWU1068

MODEL No.	Serial No.	SCAN IC	Digital Video ASSY	Service Panel ASSY 433
PDP-433PE/WYVIO6	0000001-0001550	SN755860PJ	AWV1929 AWV1941	AWU1043
	0001551-	SN755864APZP	AWV1971	AWU1069
PDP-433PG/TLDPKBRO	0000001-0001250	SN755860PJ	AWV1929 AWV1941	AWU1043
	0001251-	SN755864APZP	AWV1971	AWU1069
PDP-433PU/KUC	0000001-0003180	SN755860PJ	AWV1929 AWV1941	AWU1043
	0003181-	SN755864APZP	AWV1971	AWU1069
PDP-433CMX/LUCBW	0000001-0004310	SN755860PJ	AWV1941	AWU1043
	0004311-	SN755864APZP	AWV1971	AWU1069
PDP-433MXE/YVLDK	0000001-0002520	SN755860PJ	AWV1941	AWU1043
	0002521-	SN755864APZP	AWV1971	AWU1069

Pioneer

SERVICE INFORMATION

Date: Sep.19, 2002 **No.:** **SI-D03025** **(1/2)**

MODEL No.	*****	**SER.No.**	**S/M No.**	**PG**
PDP-503PE/WYVIO6	A	0002751-	ARP3107	
PDP-503PG/TLDPKBRO	A	0001101-	ARP3117	
PDP-503PU/KUC	A	0003051-	ARP3107	
PDP-503CMX/LUCBO	A	0009991-	ARP3093	
PDP-503MXE-S/TA	A	0000601-	ARP3120	
PDP-503MXE/YVLDK	A	0005591-	ARP3093	
PDP-433PE/WYVIO6	B	0001551-	ARP3111	
PDP-433PG/TLDPKBRO	B	0001251-	ARP3118	
PDP-433PU/KUC	B	0003181-	ARP3111	
PDP-433CMX/LUCBW	B	0004311-	ARP3123	
PDP-433MXE/YVLDK	B	0002521-	ARP3123	

	#	**CHANGE**
DETAIL	1	Change of SCAN IC
	1	Change of DIGITAL VIDEO ASS'Y due to change of SCAN IC
	1	Change of Service Panel ASS'Y due to change of SCAN IC
REASON	1	Production convenience

---- Please see the following page ----

Ref		**CURRENT**	**PARTS**	**CO**	**NEW**	**PARTS**
*****	**#**	**SYMBOL/DESCRIPTION**	**PART NUMBER**	**DE**	**PART NUMBER**	**SYMBOL/DESCRIPTION**
A	1	SCAN IC	SN755860PJ	1	SN755864APZP	SCAN IC
A	1	DIGITAL VIDEO ASS'Y	AWV1903	1	AWV1970	DIGITAL VIDEO ASS'Y
A	1	Service Panel ASS'Y 503	AWU1040	2	AWU1068	Service Panel ASS'Y 503
B	1	SCAN IC	SN755860PJ	1	SN755864APZP	SCAN IC
B	1	DIGITAL VIDEO ASS'Y	AWV1941	1	AWV1971	DIGITAL VIDEO ASS'Y
B	1	Service Panel ASS'Y 433	AWU1043	2	AWU1069	Service Panel ASS'Y 433

PIONEER CORPORATION

K.MATSUMURA ,MANAGER
DP
Service Engineering Section
Service Division

NOTE:PARTS CODE
1;Changeable from old to new.
2:Not Interchangeable an all.
3:Interchangeable in both ways
5:Do not use old parts

Memo: AA-D4416 D4417
D4427 D4428
D4495 D4497

Classify: SY66

NOTE 1 : In the above listed models, there is no interchangeability between new parts and old ones. Therefore please confirm serial number of a unit or a part number of the Digital Video ASSY firstly, and then use proper part for the unit.

NOTE 2 : If new service panel ASSY (AWU1070/AWU1071) is used instead of the old service panel ASSY (AWU1040/AWU1043), DIGITAL VIDEO ASSY should be replaced with the new part at the same time.

NOTE 3 : DIGITAL VIDEO ASSY for PDP-433P series had been changed from AWV1929 to AWV1941 during the production, therefore AWV1929 is one of the old parts.

Parts List

MODEL No.	Serial No.	SCAN IC	Digital Video ASSY	Service Panel ASSY 503
PDP-503PE/WYVIO6	0000001-0002750	SN755860PJ	AWV1903	AWU1040
	0002751-	SN755864APZP	AWV1970	AWU1068
PDP-503PG/TLDPKBRO	0000001-0001100	SN755860PJ	AWV1903	AWU1040
	0001101-	SN755864APZP	AWV1970	AWU1068
PDP-503PU/KUC	0000001-0003050	SN755860PJ	AWV1903	AWU1040
	0003051-	SN755864APZP	AWV1970	AWU1068
PDP-503CMX/LUCBO	0000001-0009990	SN755860PJ	AWV1903	AWU1040
	0009991-	SN755864APZP	AWV1970	AWU1068
PDP-503MXE-S/TA	0000001-0000600	SN755860PJ	AWV1903	AWU1040
	0000601-	SN755864APZP	AWV1970	AWU1068
PDP-503MXE/YVLDK	0000001-0005590	SN755860PJ	AWV1903	AWU1040
	0005591-	SN755864APZP	AWV1970	AWU1068

MODEL No.	Serial No.	SCAN IC	Digital Video ASSY	Service Panel ASSY 433
PDP-433PE/WYVIO6	0000001-0001550	SN755860PJ	AWV1929 AWV1941	AWU1043
	0001551-	SN755864APZP	AWV1971	AWU1069
PDP-433PG/TLDPKBRO	0000001-0001250	SN755860PJ	AWV1929 AWV1941	AWU1043
	0001251-	SN755864APZP	AWV1971	AWU1069
PDP-433PU/KUC	0000001-0003180	SN755860PJ	AWV1929 AWV1941	AWU1043
	0003181-	SN755864APZP	AWV1971	AWU1069
PDP-433CMX/LUCBW	0000001-0004310	SN755860PJ	AWV1941	AWU1043
	0004311-	SN755864APZP	AWV1971	AWU1069
PDP-433MXE/YVLDK	0000001-0002520	SN755860PJ	AWV1941	AWU1043
	0002521-	SN755864APZP	AWV1971	AWU1069

Pioneer

SERVICE INFORMATION

Date: Sep.17, 2002 **No.:** **SI-D03024-G** **(1/2)**

MODEL No.	*****	**SER.No.**	**S/M No.**	**PG**
PDP-R03E/WYVI6	A	205*****-	ARP3110	
PDP-R03G/TLDPBR	A	205*****-	ARP3119	

	#	**DETAIL**
SYMPTOM	1	Teletext function does not react at all when teletext button is pressed.
	1	It takes about 15-30 sec. to output picture when power is turned on.
CAUSE	1	Due to the soldering cracks at the lands of IC1602 on AV UNIT.
SERVICE REMEDY	1	Resolder IC1602 and IC1603 on AV UNIT.
FACTORY COUNTER -MEASURE	1	Enlarged lands of IC1602 about 0.1mm

---- Please see the parts location in the schematic back of this page ----

Ref *	**#**	**CURRENT SYMBOL/DESCRIPTION**	**PARTS PART NUMBER**	**CO DE**	**NEW PART NUMBER**	**PARTS SYMBOL/DESCRIPTION**

PIONEER CORPORATION

K.MATSUMURA ,MANAGER
DP
Technical Support Group
Service Support Division

NOTE:PARTS CODE
1:Changeable from old to new.
2:Not Interchangeable an all.
3:Interchangeable in both ways
5:Do not use old parts

Memo: MTV03-003 SY66

Classify: X

AV UNIT

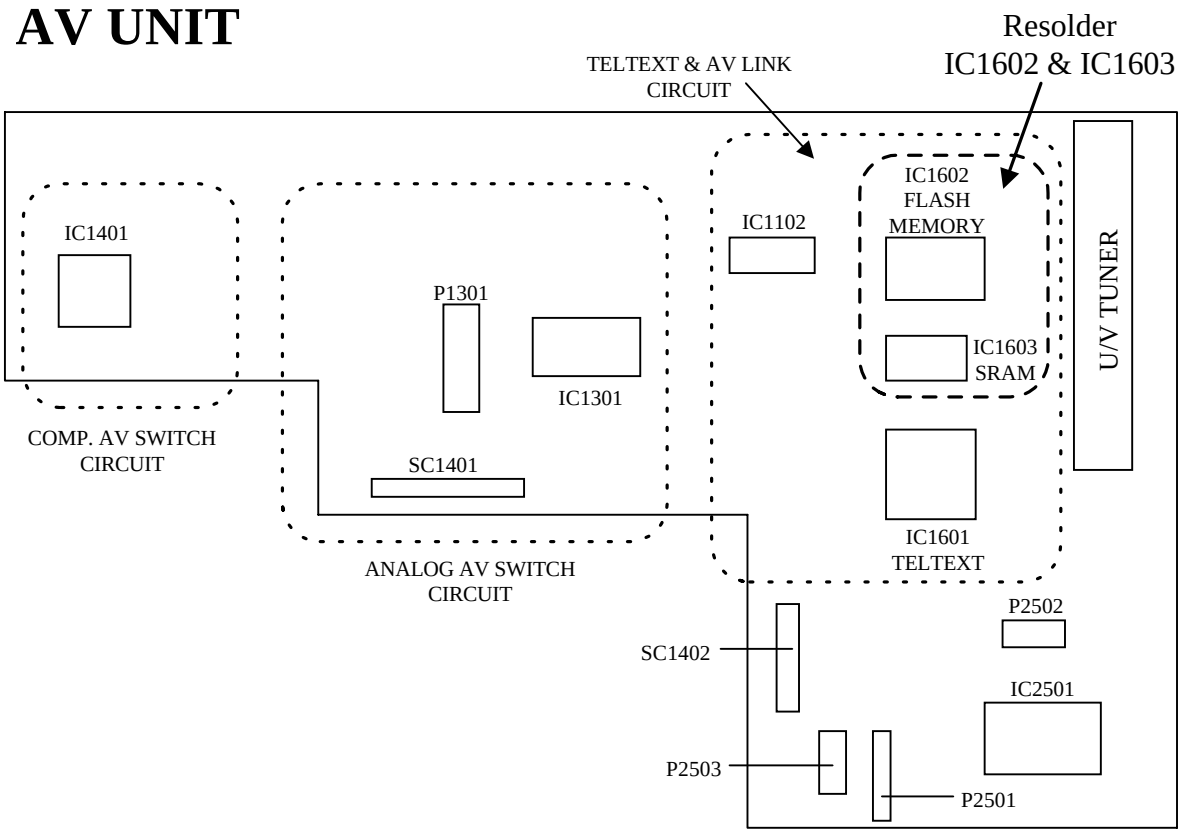
Resolder
IC1602 & IC1603
TELTEXT & AV LINK
CIRCUIT
IC1401
COMP. AV SWITCH
CIRCUIT
P1301
IC1301
SC1401
ANALOG AV SWITCH
CIRCUIT
IC1102
IC1602
FLASH
MEMORY
IC1603
SRAM
IC1601
TELTEXT
U/V TUNER
P2502
SC1402
IC2501
P2503
P2501

Pioneer

SERVICE INFORMATION

Date: Sep.4, 2002 **No.:** **SI-D03023** **(1/1)**

MODEL No.	*****	**SER.No.**	**S/M No.**	**PG**
PDP-433PE/WYVIO6	A	R/C	ARP3111	
PDP-433PE/WYVI6XK	A	R/C	ARP3111	
PDP-433PG/TLDPKBRO	A	R/C	ARP3118	
PDP-433PU/KUC	A	R/C	ARP3111	
PDP-433CMX/LUCBW	B	R/C	ARP3123	
PDP-433MXE/YVLDK	B	R/C	ARP3123	

	#	**CHANGE**
DETAIL	1	Changed the color of parts
REASON	1	Production Convenience

Ref		**CURRENT**	**PARTS**	**CO**	**NEW**	**PARTS**
*****	**#**	**SYMBOL/DESCRIPTION**	**PART NUMBER**	**DE**	**PART NUMBER**	**SYMBOL/DESCRIPTION**
A	1	Terminal Panel (HD)	ANG2485	1	ANG2534	Terminal Panel
B	1	Terminal Panel CMX	ANG2486	1	ANG2535	Terminal Panel
B	1	Expansion Slot Cover	ANG2463	1	ANG2536	Expansion Slot Cover

PIONEER CORPORATION

K.MATSUMURA ,MANAGER
DP
Technical Support Group
Service Support Division

NOTE:PARTS CODE
1;Changeable from old to new.
2:Not Interchangeable an all.
3:Interchangeable in both ways
5:Do not use old parts

Memo: SPC57-249 SY66
AA-D4528

Classify:

Pioneer

SERVICE INFORMATION

Date: Sep.6, 2002 **No.:** **SI-D03022** **(1/1)**

MODEL No.	*****	**SER.No.**	**S/M No.**	**PG**
PDP-433PE/WYVI6XK	A	R/C	ARP3111	
PDP-433PE/WYVIO6	A	R/C	ARP3111	
PDP-433PG/TLDPKBRO	A	R/C	ARP3118	
PDP-433PU/KUC	A	R/C	ARP3111	

	#	**CHANGE**
DETAIL	1	Added a caution and four spacers
REASON	1	To inform that how to attach optional speakers using four spacers to meet a new Rear Case

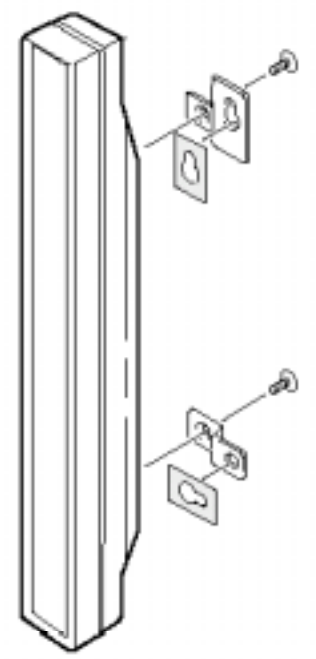

Note for installation of the side speakers on the plasma display monitor

When the above-mentioned speakers are mounted on the main body of the plasma display monitor, the front panels of the speaker may not be completely flush with the front panel of the plasma display monitor.
In this case, attach the provided spacers on the speaker mount brackets as shown in the figure on the left before mounting the speakers on the plasma display monitor.

Ref		**CURRENT**	**PARTS**	**CO**	**NEW**	**PARTS**
*****	**#**	**SYMBOL/DESCRIPTION**	**PART NUMBER**	**DE**	**PART NUMBER**	**SYMBOL/DESCRIPTION**
A	1		Added	-	ARM1218	Caution
A	1		Added	-	AEC1925	Spacer (1piece)

PIONEER CORPORATION

K.MATUMURA ,MANAGER
DP
Technical Support Group
Service Support Division

NOTE:PARTS CODE
1;Changeable from old to new.
2:Not Interchangeable an all.
3:Interchangeable in both ways
5:Do not use old parts

Memo: SPC57-255 SY66
AA-D4559

Classify:

Pioneer

SERVICE INFORMATION

Date: Sep.5, 2002 **No.:** **SI-D03021** **(1/4)**

MODEL No.	*****	**SER.No.**	**S/M No.**	**PG**
PDP-502MX/LUCBW	A		ARP3037	
PDP-502MXE/YVLDK	A		ARP3037	
PDP-505HD/KUC	A		ARP3043	
PDP-502MX/LUCBW/1	A		ARP3075	
PDP-502MXE/YVLDK/1	A		ARP3075	
PDP-505HD/KUC/1	A		ARP3080	

	#	**CHANGE**
DETAIL	1	A new adjustment method to meet a new service panel

REASON 1 Wide VOFS margin panels had been used for service,
and they had been only ten percent of the panel production quantity.
However all of new production service panels will be used for service,
so it is necessary to adjust VOFS.

Part number of new service panel ASSY : AWU1027, AWU1032

Check a white sticker on the service panel.

If "Color 1=R (or G, B)" is writen in the white sticker, it is a new service panel and requires the new adjustment.

Vsus=172 Vadr= 59
Vofs= 32 Vrst=200
Vh =103 Color 1=R
Date02/07/12 Chasis 3
Time 15:12:53 pnl a314140

e.g.
The sticer of new service panel

Vsus=172 Vadr= 59
Vofs= 32 Vrst=200
Vh =103

e.g.
The sticer of old service panel

----- Please see the following pages about Replacement Procedure of Service Panel -----

Ref *	**#**	**CURRENT SYMBOL/DESCRIPTION**	**PARTS PART NUMBER**	**CO DE**	**NEW PART NUMBER**	**PARTS SYMBOL/DESCRIPTION**

PIONEER CORPORATION

K.MATSUMURA ,MANAGER
DP
Technical Support Group
Service Support Division

NOTE:PARTS CODE
1;Changeable from old to new.
2:Not Interchangeable an all.
3:Interchangeable in both ways
5:Do not use old parts

Memo:

Classify:

PDP-502 Service Panel Replacement Procedure

Preparation

Connect signal generator (NTSC)
Contrast -> Set up factory setting
Bright -> Set up factory setting
Display white signal and wait for five minutes

Prepare NTSC Signal Generator (SG) which can be output white, Red, Green, and Blue

Change input signal to black color.

If performing each voltage adjustment by white signal, an adjustment error will occur. So please adjust them by black signal.

Vh Adjustment

By referring the Fig.1, set Vh voltage.
(Please perform it completely. Circuit damage or short panel life time may occur by this mis-adjustment.)

The original Vh voltage		New Vh voltage
85V 110V	⇨	**110V**
130V	⇨	**130V**
103V	⇨	**103V**

Fig. 1New Vh setting value

Vsus Adjustment
Vofs Pre-adjustment

Set Vsus data and Vofs data, as shown in the panel sticker.

Vsus=172 Vadr= 59
Vofs= 32 Vrst=200
Vh =103 Color 1=R
Date02/07/12 Chasis 3
Time 15:12:53 pnl a314140

Fig 2. panel sticker

Selection of adjustment color

Adjustment color (Color1) written in the panel sticker becomes "**Adjustment color 1**"

Referring the Fig 3, find "**Adjustment color 2**"and "**Adjustment color 3**".

Adjustment color 1		Adjustment color 2	Adjustment color 3
G	⇨	B	R
B	⇨	G	R
R	⇨	G	B

Fig3. Adjustment color selection

Vofs Adjustment

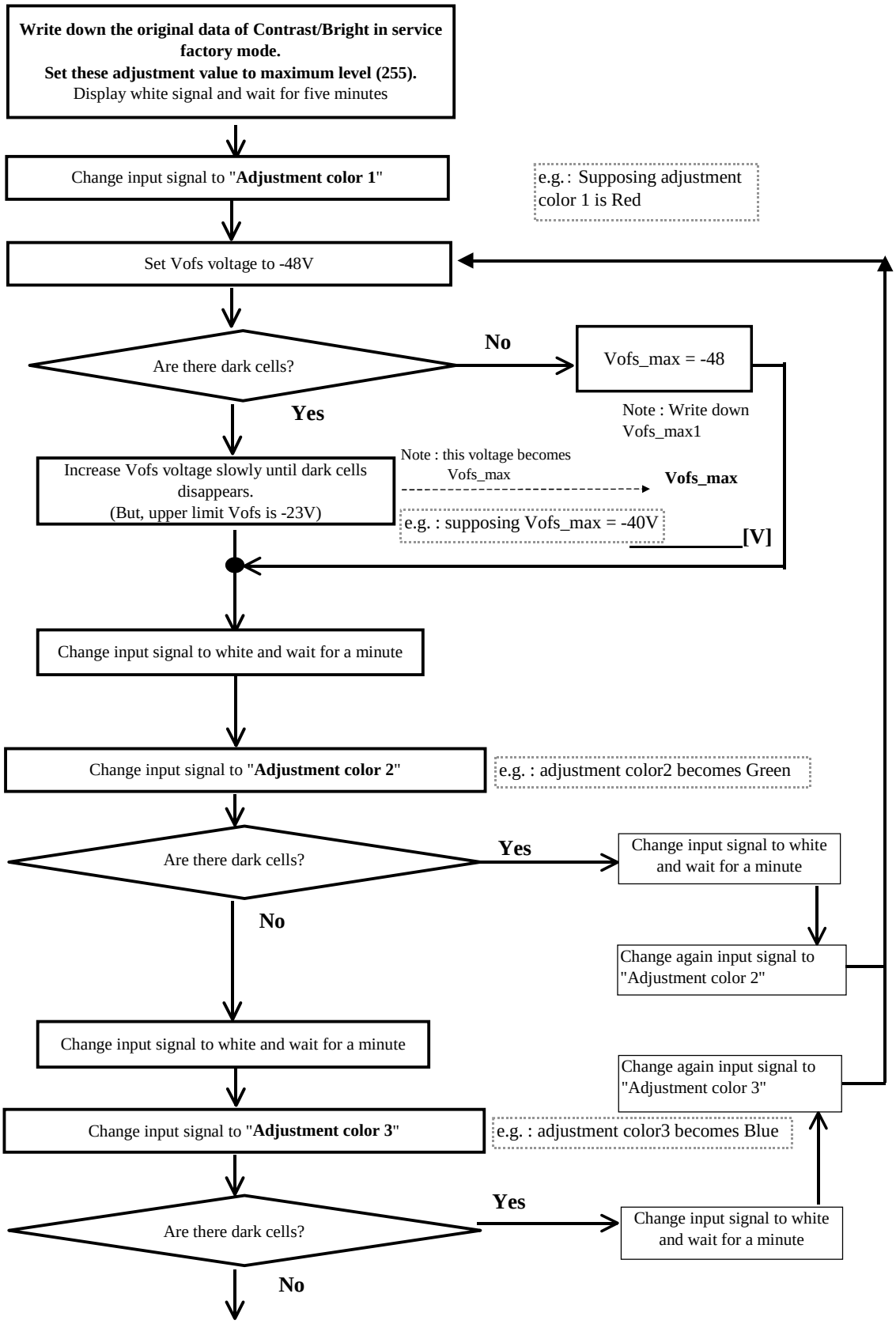

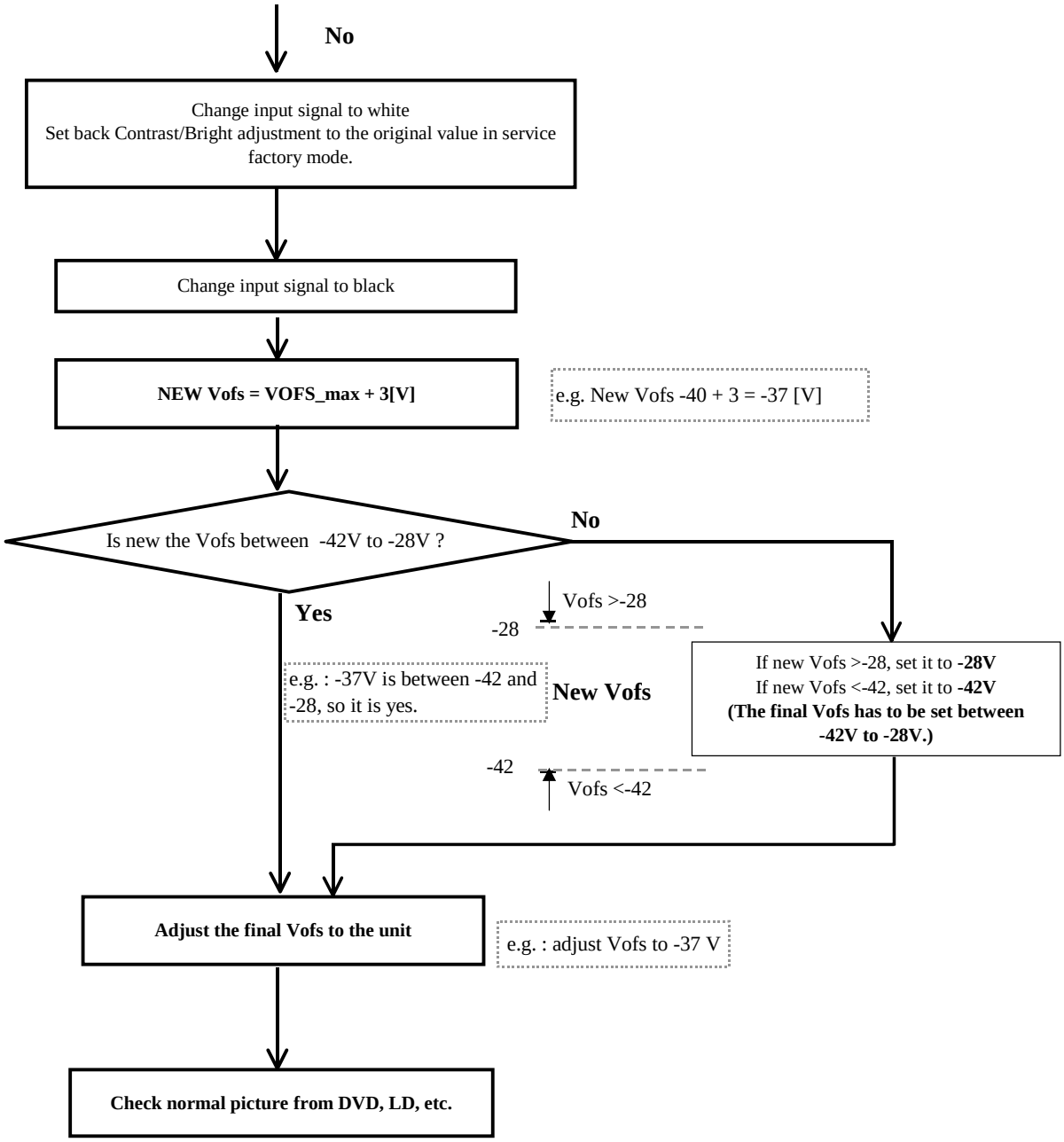

In case of 502 VA model (PDP-502MX-1), dark cells may appear for gray color signal (about 50 IRE).
In the case:
Change X-SUS-G setting from 8 to 12 in service factory mode.
(This method only works 502 VA model, so **please do not perform it to 502 normal model.**)

Pioneer

SERVICE INFORMATION

Date: Sep.5, 2002 **No.:** **SI-D03021** **(1/4)**

MODEL No.	*****	**SER.No.**	**S/M No.**	**PG**
PDP-502MX/LUCBW	A		ARP3037	
PDP-502MXE/YVLDK	A		ARP3037	
PDP-505HD/KUC	A		ARP3043	
PDP-502MX/LUCBW/1	A		ARP3075	
PDP-502MXE/YVLDK/1	A		ARP3075	
PDP-505HD/KUC/1	A		ARP3080	

	#	**CHANGE**
DETAIL	1	A new adjustment method to meet a new service panel

REASON	1	Wide VOFS margin panels had been used for service, and they had been only ten percent of the panel production quantity. However all of new production service panels will be used for service, so it is necessary to adjust VOFS.

Part number of new service panel ASSY : AWU1027, AWU1032

Check a white sticker on the service panel.

If "Color 1=R (or G, B)" is writen in the white sticker, it is a new service panel and requires the new adjustment.

Vsus=172 Vadr=59
Vofs= 32 Vrst=200
Vh =103 Color 1=R
Date02/07/12 Chasis 3
Time 15:12:53 pnl a314140

e.g.
The sticer of new service panel

Vsus=172 Vadr=59
Vofs= 32 Vrst=200
Vh =103

e.g.
The sticer of old service panel

----- Please see the following pages about Replacement Procedure of Service Panel -----

Ref *	**#**	**CURRENT SYMBOL/DESCRIPTION**	**PARTS PART NUMBER**	**CO DE**	**NEW PART NUMBER**	**PARTS SYMBOL/DESCRIPTION**

PIONEER CORPORATION

K.MATSUMURA ,MANAGER
DP
Technical Support Group
Service Support Division

NOTE:PARTS CODE
1;Changeable from old to new.
2:Not Interchangeable an all.
3:Interchangeable in both ways
5:Do not use old parts

Memo:

Classify:

PDP-502 Service Panel Replacement Procedure

Preparation

Connect signal generator (NTSC)
Contrast -> Set up factory setting
Bright -> Set up factory setting
Display white signal and wait for five minutes

Prepare NTSC Signal Generator (SG) which can be output white, Red, Green, and Blue

Change input signal to black color.

If performing each voltage adjustment by white signal, an adjustment error will occur. So please adjust them by black signal.

Vh Adjustment

By referring the Fig.1, set Vh voltage.
(Please perform it completely. Circuit damage or short panel life time may occur by this mis-adjustment.)

The original Vh voltage		New Vh voltage
85V 110V	⇨	**110V**
130V	⇨	**130V**
103V	⇨	**103V**

Fig. 1New Vh setting value

Vsus Adjustment
Vofs Pre-adjustment

Set Vsus data and Vofs data, as shown in the panel sticker.

Vsus=172 Vadr= 59
Vofs= 32 Vrst=200
Vh =103 Color 1=R
Date02/07/12 Chasis 3
Time 15:12:53 pnl a314140

Fig 2. panel sticker

Selection of adjustment color

Adjustment color (Color1) written in the panel sticker becomes "**Adjustment color 1**"

Referring the Fig 3, find "**Adjustment color 2**"and "**Adjustment color 3**".

Adjustment color 1		Adjustment color 2	Adjustment color 3
G	⇨	B	R
B	⇨	G	R
R	⇨	G	B

Fig3. Adjustment color selection

Vofs Adjustment

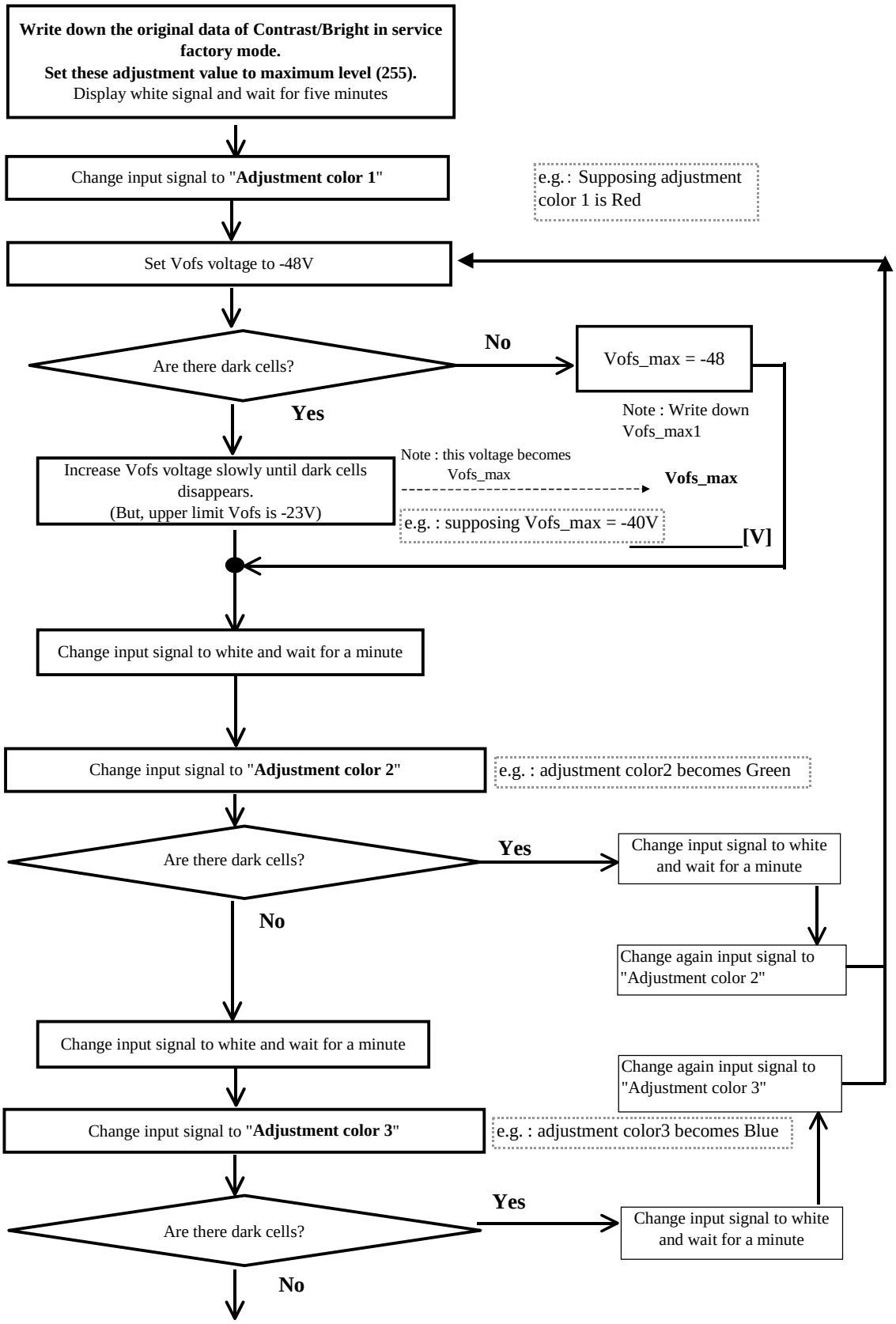

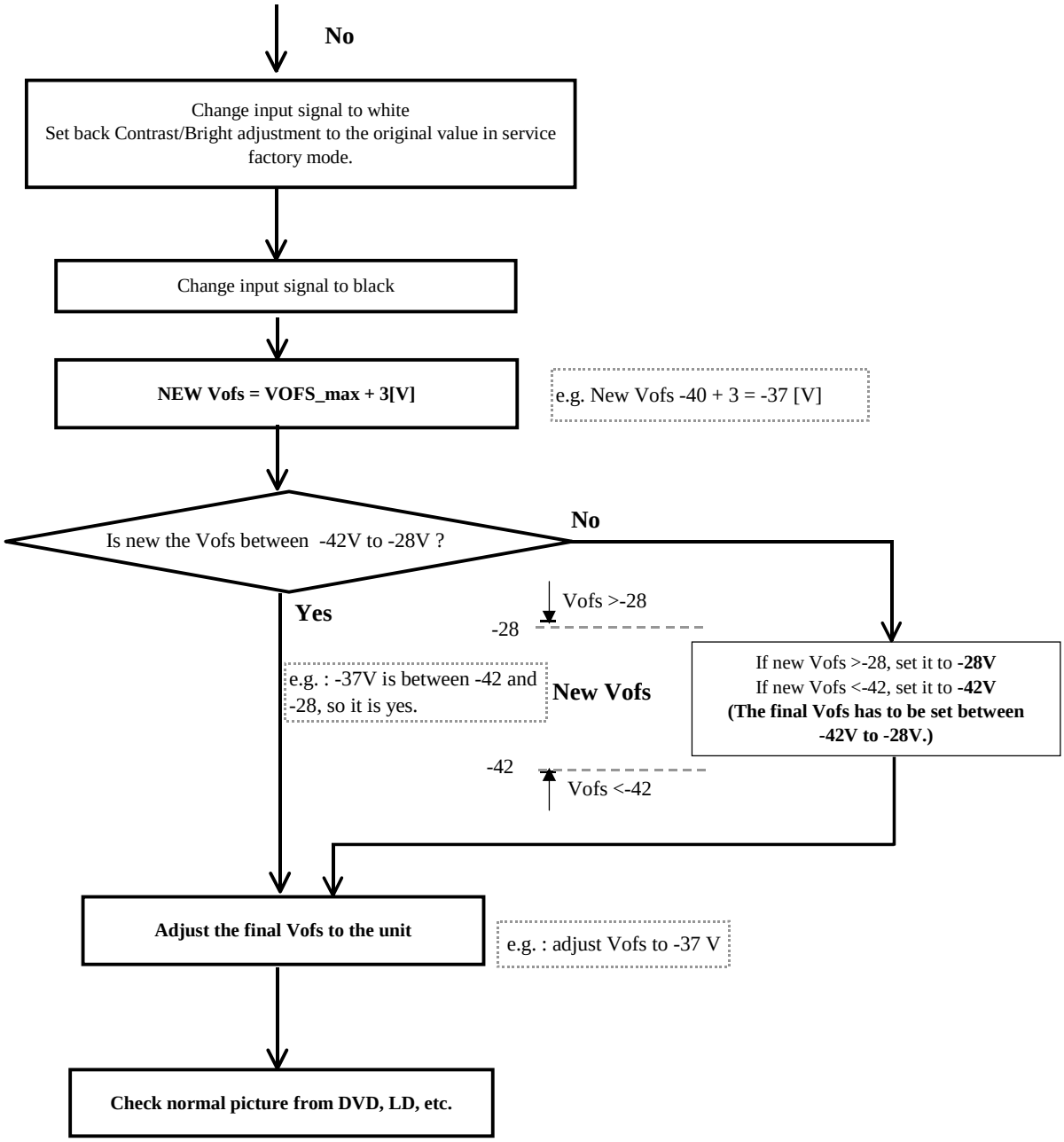

In case of 502 VA model (PDP-502MX-1), dark cells may appear for gray color signal (about 50 IRE).
In the case:
Change X-SUS-G setting from 8 to 12 in service factory mode.
(This method only works 502 VA model, so **please do not perform it to 502 normal model.**)

Pioneer

SERVICE INFORMATION

Date: Aug.26, 2002 **No.:** **SI-D03019** **(1/2)**

MODEL No. * **SER.No.** **S/M No.** **PG**

See to following page

	#	CHANGE
DETAIL	1	Changed Y LOGIC DRIVE BLOCK

REASON	1	To improve SCAN IC protection circuit

SUS mute Detect circuit

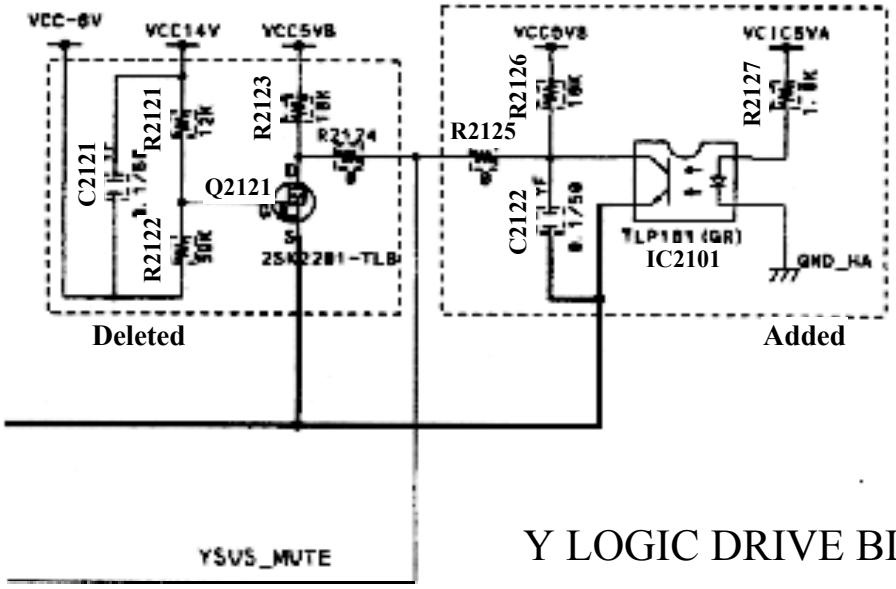

Y LOGIC DRIVE BLOCK

Ref *	#	CURRENT SYMBOL/DESCRIPTION	PARTS PART NUMBER	CODE	NEW PART NUMBER	PARTS SYMBOL/DESCRIPTION
A	1	R2121	RS1/16S123J	-	Deleted	
A	1	R2122	RS1/16S393J	-	Deleted	
A	1	R2123	RS1/16S183J	-	Deleted	
A	1	C2121	CKSRYF104Z50	-	Deleted	
A	1	Q2121	2SK2201	-	Deleted	
A	1		Added	-	RS1/16S0R0J	R2125
A	1		Added	-	RS1/16S183J	R2126
A	1		Added	-	RS1/16S102J	R2127
A	1		Added	-	CKSRYF104Z50	C2122
A	1		Added	-	TLP181	IC2101

PIONEER CORPORATION

K.MATSUMURA ,MANAGER
DP
Technical Support Group
Service Support Division

NOTE:PARTS CODE
1;Changeable from old to new.
2:Not Interchangeable an all.
3:Interchangeable in both ways
5:Do not use old parts

Memo: SPC57-223 SY66
AA-D4504

Classify:

MODEL No.	*	SER.No.	S/M No.	PG
PDP-503PE/WYVIO6	A	R/C	ARP3108	
PDP-503PG/TLDPKBRO	A	R/C	ARP3117	
PDP-503PU/KUC	A	R/C	ARP3108	
PDP-503PC/TAXQ	A	R/C	ARP3135	
PDP-503PE/WYVI6XK	A	R/C	ARP3108	
PDP-503CMX/LUCBO	A	R/C	ARP3100	
PRO-1000HD/LUXC/CA	A	R/C	ARP3100	
PDP-503MXE-S/TA	A	R/C	ARP3120	
PDP-503MXE/YVLDK	A	R/C	ARP3100	
PDU-50WX2/TUCYV	A	R/C	ARP3115	
PDP-433PE/WYVIO6	A	R/C	ARP3112	
PDP-433PG/TLDPKBRO	A	R/C	ARP3118	
PDP-433PU/KUC	A	R/C	ARP3112	
PDP-433PE/WYVI6XK	A	R/C	ARP3112	
PDP-433CMX/LUCBW	A	R/C	ARP3124	
PRO-800HD/LUXC/CA	A	R/C	ARP3124	
PDP-433MXE/YVLDK	A	R/C	ARP3124	
PDU-43WX2/TUCYV	A	R/C	ARP3121	

Pioneer

SERVICE INFORMATION

Date: Nov.5, 2002 **No.:** **SI-D03018** **(1/1)**

MODEL No.	*****	**SER.No.**	**S/M No.**	**PG**
PDP-R03G/TLDPBOR	A		ARP3119	

	#	**CHANGE**
DETAIL	1	Change of parts
REASON	1	Production Convenience

Ref *	**#**	**CURRENT SYMBOL/DESCRIPTION**	**PARTS PART NUMBER**	**CODE**	**NEW PART NUMBER**	**PARTS SYMBOL/DESCRIPTION**
A	1	MAIN UNIT	DUNTKA535DE12	5	DUNTKA535FE05	MAIN UNIT
A	1	AV UNIT	DUNTKA620DE02	5	DUNTKA620DE01	AV UNIT
A	1	FRONT UNIT	DUNTKA621DE02	5	DUNTKA621DE01	FRONT UNIT
A	1	SR UNIT	DUNTKA622DE02	5	DUNTKA622DE01	SR UNIT
A	1	LED UNIT	DUNTKA623DE02	5	DUNTKA623DE01	LED UNIT
A	1	NJM2375AD	VHINJM2375AD1	5	VHINJM2375AM1	NJM2375AM
A	1		Added	-	VSGF4435+++-1Y	GF4435
A	1		Added	-	LX-NZ3182CEFN	SCREW
A	1		Added	-	TLABSA009WJZZ	LABEL (TAIWAN SAFETY)
A	1		Added	-	TCAUH1224CEZZ	CAUTION (PDP)
A	1		Added	-	TCAUH1228CEZZ	CAUTION (CABLE)
A	1		Added	-	TCAUH1232CEZZ	CAUTION (SETTING)

PIONEER CORPORATION

K.MATSUMURA ,MANAGER
DP
Technical Support Group
Service Support Division

NOTE:PARTS CODE
1;Changeable from old to new.
2:Not Interchangeable an all.
3:Interchangeable in both ways
5:Do not use old parts

Memo: SPC57-226 SY66
AA-D4538

Classify:

Pioneer

SERVICE INFORMATION

Date: Aug.28, 2002 **No.:** **SI-D03017** **(1/2)**

MODEL No.	*****	**SER.No.**	**S/M No.**	**PG**
PDP-433CMX/LUCBW	A	R/C	ARP3124	
PDP-433MXE/YVLODKO	A	R/C	ARP3124	
PDP-433PE/WYVIO6	A	R/C	ARP3111	
PDP-433PG/TLDPKOB6	A	R/C	ARP3118	
PDP-433PU/KUC	A	R/C	ARP3111	
PDU-43WX2/TUCYV	A	R/C		

	#	**CHANGE**
DETAIL	1	Deleted some parts and changed wire
REASON	1	Production Convenience

---- Please see the parts location in the schematic back of this page ----

Ref *	**#**	**CURRENT SYMBOL/DESCRIPTION**	**PARTS PART NUMBER**	**CODE**	**NEW PART NUMBER**	**PARTS SYMBOL/DESCRIPTION**
A	1	CLAMP A ASS'Y	AWZ6668	-	Deleted	
A	1	CLAMP B ASS'Y	AWZ6669	-	Deleted	
A	1	Locking Card Spacer	AEC1736	-	Deleted	
A	1	Screw	ABA1301	-	Deleted	
A	1	C6422, C6432,	ACG1098	-	Deleted	
A	1	C6442, C6452	ACG1098	-	Deleted	
A	1	D6422, D6432,	D1FL20U	-	Deleted	
A	1	D6442, D6452	D1FL20U	-	Deleted	
A	1	J0116 (4P Housing Wire)	ADX2767	1	ADX2783	J0116 (4P Housing Wire)
A	1	J0117 (4P Housing Wire)	ADX2767	1	ADX2783	J0117 (4P Housing Wire)

PIONEER CORPORATION

K.MATSUMURA ,MANAGER
DP
Service Engineering Section
Service Division

NOTE:PARTS CODE
1;Changeable from old to new.
2:Not Interchangeable an all.
3:Interchangeable in both ways
5:Do not use old parts

Memo: SPC57-139 SY66
AA-D4136

Classify:

BRIDGE A - D ASSYS

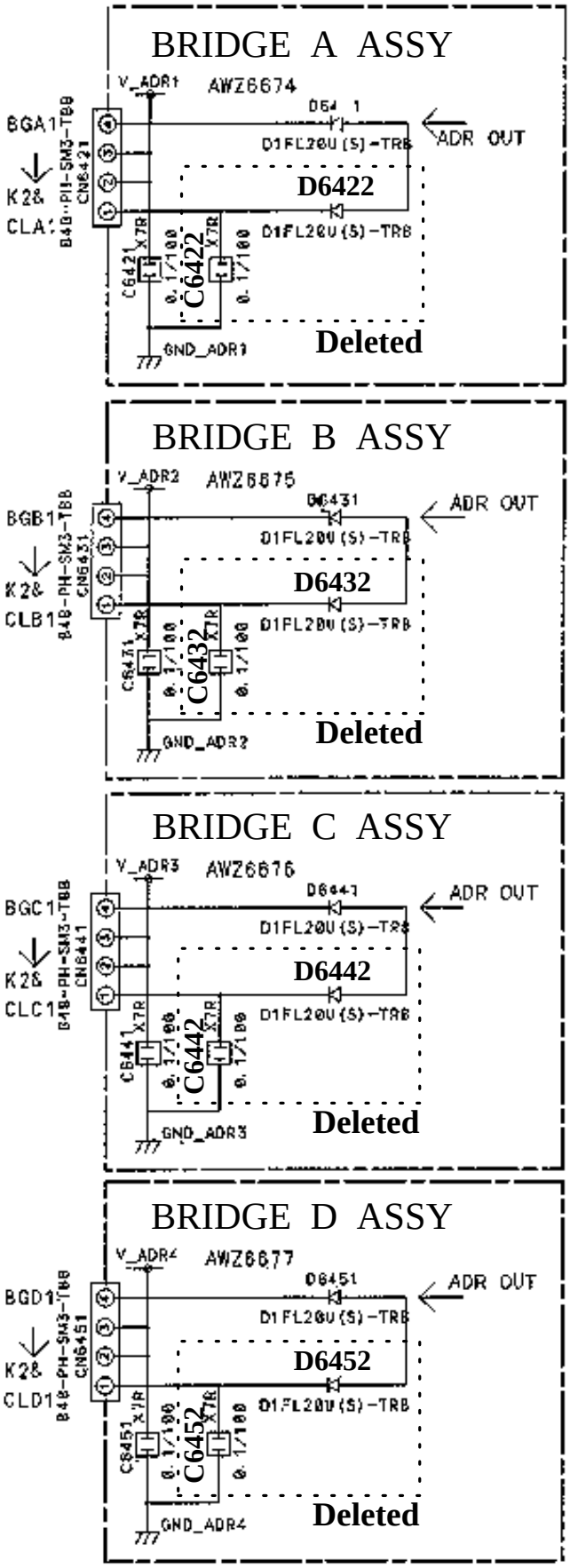

Pioneer

SERVICE INFORMATION

Date: Oct.30, 2002 **No.:** **SI-D03016-A** **(1/2)**

MODEL No.	*	SER.No.	S/M No.	PG
PDP-503CMX/LUCBO	A	0008541-	ARP3093	
PDP-503MXE/YVLDK	A	0005521-	ARP3093	
PDP-503PE/WYVIO6	A	0002681-	ARP3107	
PDP-503PU/KUC	A	0002431-	ARP3107	
PDU-50WX2/TUCYV	A	0000071-	ARP3114	
PDP-503PG/TLDPKBRO	A	0001341-	ARP3117	
PDP-433CMX/LUCBW	B	0002201-	ARP3123	
PDP-433MXE/YVLDK	B	0001461-	ARP3123	
PDP-433PE/WYVIO6	B	0001451-	ARP3111	
PDP-433PU/KUC	B	0002761-	ARP3111	
PDU-43WX2/TUCYV	B	ALL		
PDP-433PG/TLDPKBRO	B	0001271-	ARP3118	

	#	CHANGE
DETAIL	1	Change Power Supply ASSY

REASON	1	To use for both of 43 inches model and 50 inches model.

----- Please see the back of this page -----

Please dispose of the previous Service Information, **SI-D03016** issued on Aug.1, 2002.

Note 1 : In the old Power Supply ASSYs, when replacing to a new part from AXY1051 or AXY1053, Please use V MID CLAMP ASSY (AWV1934) which is installed on PDP chassis.

Note2 : When replacing to a new Power Supply ASSY (AXY1059) from an old Power Supply ASSY (AXY1051, AXY1053, AXY1055, AXY1056), VSUS readjustment is required.
Replacing to an old one from a new one is also same.

(Because this adjustment is related to panel life time and dark cells, please perform this adjustment completely.)

Ref *	#	CURRENT SYMBOL/DESCRIPTION	PARTS PART NUMBER	CO DE	NEW PART NUMBER	PARTS SYMBOL/DESCRIPTION
A	1	Power Supply ASSY	AXY1051		AXY1059	Power Supply ASSY
A	1	Power Supply ASSY	AXY1053		AXY1059	Power Supply ASSY
A	1	Power Supply ASSY	AXY1055		AXY1059	Power Supply ASSY
B	1	Power Supply ASSY	AXY1056		AXY1059	Power Supply ASSY

PIONEER CORPORATION
K.MATSUMURA ,MANAGER
DP
Technical Support Group
Service Support Division

NOTE:PARTS CODE
1;Changeable from old to new.
2:Not Interchangeable an all.
3:Interchangeable in both ways
5:Do not use old parts

Memo: AA-D4282 SY66
AA-D4361
AA-D4726

Classify:

Part Number of old /new SW Power Supply Module

	Old Part Number	New Part Number
50 inches	AXY1051, AXY1053, AXY1055	AXY1059
43 inches	AXY1056	

Please check the part number of the original power supply ASSY before replacing it. If replacing to a new part from the old part, or to an old part from the new part, perform the following VSUS readjustment after replacement.

If the unit is consumer model (503PE/PU/ PG, 433PE/PU/PG), please refer to "1: How to re-adjust VSUS for consumer model"

If the unit is industrial model (503CMX/MXE, 433CMX/MXE), please refer to "2: How to re-adjust VSUS for industrial model "

1: How to re-adjust VSUS for consumer model (If the unit is 43 inches, please refer to the following note.)

1. Go to service factory mode and then write down the VSUS data of the unit in service factory mode.
   (The VSUS data is on 12/13 page or 17/17 page of the service factory mode)

2. Look for new VSUS data from an original VSUS data using the following conversion table of the VSUS data.

3. Set the new VSUS data at "VSUS ADJ" in service factory mode
   (By using volume up/down keys on remote, you are able to change the value of VSUS data.)

NOTE: If the unit is 43 inch model, write down value of VSUS data by following procedure;
1 Confirm "MONITOR VERSION" in page 1 of service factory mode.
2. i) If the last two digit number of the version is 17 or over,
-> Write down VSUS data (It is not necessary to check panel temperature)
ii) If the last two digit number of the version is 16 or under,
-> Write down VSUS data while "CENSER TEMP" is 25 to 30 .
(CENSER TEMP is located in page 2 of service factory mode)

2: How to re-adjust VSUS for industrial model

1. Go to service factory mode and then write down the VSUS data of the unit in service factory mode.
   (The VSUS data is on REF-DIG in service factory mode.)

2. Look for new VSUS data from an original VSUS data using the following conversion table of the VSUS data.

3. Set the new VSUS data at "V-SUS" on REF-DIG in service factory mode
   (By using left " ◀ " and right " ▶" keys on the remote, you are able to change the value of VSUS data.)

<VSUS data Conversion Table>

New data	Old data	
	433 inch	503 inch
VSUS000	None	None
VSUS004	None	None
VSUS009	None	None
VSUS013	None	None
VSUS017	None	None
VSUS021	VSUS000	None
VSUS026	VSUS005	None
VSUS030	VSUS010	None
VSUS034	VSUS015	None
VSUS038	VSUS020	None
VSUS043	VSUS026	None
VSUS047	VSUS031	None
VSUS051	VSUS036	None
VSUS055	VSUS041	None
VSUS060	VSUS046	None
VSUS064	VSUS051	VSUS000
VSUS068	VSUS056	VSUS006
VSUS073	VSUS061	VSUS013
VSUS077	VSUS067	VSUS019
VSUS081	VSUS072	VSUS026
VSUS085	VSUS077	VSUS032
VSUS090	VSUS082	VSUS038
VSUS094	VSUS087	VSUS045
VSUS098	VSUS092	VSUS051
VSUS102	VSUS097	VSUS058
VSUS107	VSUS102	VSUS064
VSUS111	VSUS108	VSUS070
VSUS115	VSUS113	VSUS077
VSUS119	VSUS118	VSUS083
VSUS124	VSUS123	VSUS090
VSUS128	VSUS128	VSUS096

New data	Old data	
	433 inch	503 inch
VSUS132	VSUS133	VSUS102
VSUS136	VSUS138	VSUS109
VSUS141	VSUS143	VSUS115
VSUS145	VSUS148	VSUS122
VSUS149	VSUS153	VSUS128
VSUS153	VSUS158	VSUS134
VSUS158	VSUS164	VSUS141
VSUS162	VSUS169	VSUS147
VSUS166	VSUS174	VSUS153
VSUS170	VSUS179	VSUS160
VSUS175	VSUS184	VSUS166
VSUS179	VSUS189	VSUS172
VSUS183	VSUS194	VSUS179
VSUS187	VSUS199	VSUS185
VSUS192	VSUS204	VSUS192
VSUS196	VSUS209	VSUS198
VSUS200	VSUS214	VSUS204
VSUS204	VSUS219	VSUS211
VSUS208	VSUS225	VSUS217
VSUS213	VSUS230	VSUS223
VSUS217	VSUS235	VSUS230
VSUS221	VSUS240	VSUS236
VSUS225	VSUS245	VSUS242
VSUS230	VSUS250	VSUS249
VSUS234	VSUS255	VSUS255
VSUS238	None	None
VSUS242	None	None
VSUS247	None	None
VSUS251	None	None
VSUS255	None	None

<VSUS data readjustment flow chart>

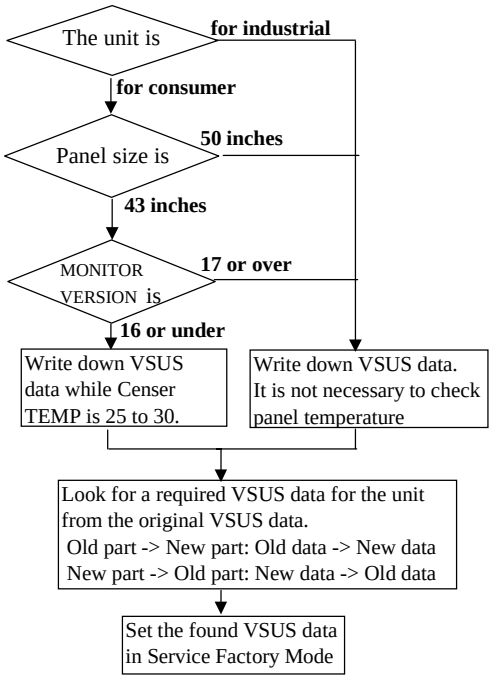

Pioneer

SERVICE INFORMATION

Date: Aug.1, 2002 **No.:** **SI-D03016** **(1/2)**

MODEL No.	*	SER.No.	S/M No.	PG
PDP-503CMX/LUCBO	A	008541-	ARP3093	
PDP-503MXE/YVLDK	A	005521-	ARP3093	
PDP-503PE/WYVIO6	A	002681-	ARP3107	
PDP-503PU/KUC	A	002431-	ARP3107	
PDU-50WX2/TUCYV	A	000071-	ARP3114	
PDP-433CMX/LUCBW	A	002201-	ARP3123	
PDP-433MXE/YVLDK	A	001461-	ARP3123	
PDP-433PE/WYVIO6	A	001451-	ARP3111	
PDP-433PU/KUC	A	002761-	ARP3111	
PDU-43WX2/TUCYV	A	ALL		

	#	CHANGE
DETAIL	1	Change Power Supply ASSY

REASON 1 To use for both of 43 inches model and 50 inches model.

Note 1 : In the old Power Supply ASSYs, when replacing to a new part from AXY1051 or AXY1053, Please use V MID CLAMP ASSY (AWV1934) which is installed on PDP chassis.

Note2 : When replacing to a new Power Supply ASSY (AXY1059) from an old Power Supply ASSY (AXY1051, AXY1053, AXY1055, AXY1056), VSUS readjustment is required.
Replacing to an old one from a new one is also same.

(Because this adjustment is related to panel life time and dark cells, please perform this adjustment completely.)

--- Please see the back of this page ---

Ref *	#	CURRENT SYMBOL/DESCRIPTION	PARTS PART NUMBER	CO DE	NEW PART NUMBER	PARTS SYMBOL/DESCRIPTION
A	1	Power Supply ASSY	AXY1051		AXY1059	Power Supply ASSY
A	1	Power Supply ASSY	AXY1053		AXY1059	Power Supply ASSY
A	1	Power Supply ASSY	AXY1055		AXY1059	Power Supply ASSY
A	1	Power Supply ASSY	AXY1056		AXY1059	Power Supply ASSY

PIONEER CORPORATION
K.MATSUMURA ,MANAGER
DP
Technical Support Group
Service Support Division

NOTE:PARTS CODE
1;Changeable from old to new.
2:Not Interchangeable an all.
3:Interchangeable in both ways
5:Do not use old parts

Memo: AA-D4282 SY64
AA-D4361

Classify:

Part Number of old /new SW Power Supply Module

	Old Part Number	New Part Number
50 inches	AXY1051, AXY1053, AXY1055	AXY1059
43 inches	AXY1056	

Please check the part number of the original power supply ASSY before replacing it. If replacing to a new part from the old part, or to an old part from the new part, perform the following VSUS readjustment after replacement.

If the unit is consumer model (503PE/PU/ PG, 433PE/PU/PG), please refer to "1: How to re-adjust VSUS for consumer model"

If the unit is industrial model (503CMX/MXE, 433CMX/MXE), please refer to "2: How to re-adjust VSUS for industrial model "

1: How to re-adjust VSUS for consumer model (If the unit is 43 inches, please refer to the following note.)

1. Go to service factory mode and then write down the VSUS data of the unit in service factory mode.
   (The VSUS data is on 12/13 page or 17/17 page of the service factory mode)

2. Look for new VSUS data from an original VSUS data using the following conversion table of the VSUS data.

3. Set the new VSUS data at "VSUS ADJ" in service factory mode
   (By using volume up/down keys on remote, you are able to change the value of VSUS data.)

NOTE: **If the unit is 43 inch model, write down value of VSUS data by following procedure;**
1 Confirm "MONITOR VERSION" in page 1 of service factory mode.
2. i) If the last two digit number of the version is 17 or over,
-> Write down VSUS data (It is not necessary to check panel temperature)
ii) If the last two digit number of the version is 16 or under,
-> Write down VSUS data while "CENSER TEMP" is 25 to 30 .
(CENSER TEMP is located in page 2 of service factory mode)

2: How to re-adjust VSUS for industrial model

1. Go to service factory mode and then write down the VSUS data of the unit in service factory mode.
   (The VSUS data is on REF-DIG in service factory mode.)

2. Look for new VSUS data from an original VSUS data using the following conversion table of the VSUS data.

3. Set the new VSUS data at "V-SUS" on REF-DIG in service factory mode
   (By using left " ◀ " and right " ▶ " keys on the remote, you are able to change the value of VSUS data.)

<VSUS data Conversion Table>

New data	Old data	
	433 inch	503 inch
VSUS000	None	None
VSUS004	None	None
VSUS009	None	None
VSUS013	None	None
VSUS017	None	None
VSUS021	VSUS000	None
VSUS026	VSUS005	None
VSUS030	VSUS010	None
VSUS034	VSUS015	None
VSUS038	VSUS020	None
VSUS043	VSUS026	None
VSUS047	VSUS031	None
VSUS051	VSUS036	None
VSUS055	VSUS041	None
VSUS060	VSUS046	None
VSUS064	VSUS051	VSUS000
VSUS068	VSUS056	VSUS006
VSUS073	VSUS061	VSUS013
VSUS077	VSUS067	VSUS019
VSUS081	VSUS072	VSUS026
VSUS085	VSUS077	VSUS032
VSUS090	VSUS082	VSUS038
VSUS094	VSUS087	VSUS045
VSUS098	VSUS092	VSUS051
VSUS102	VSUS097	VSUS058
VSUS107	VSUS102	VSUS064
VSUS111	VSUS108	VSUS070
VSUS115	VSUS113	VSUS077
VSUS119	VSUS118	VSUS083
VSUS124	VSUS123	VSUS090
VSUS128	VSUS128	VSUS096

New data	Old data	
	433 inch	503 inch
VSUS132	VSUS133	VSUS102
VSUS136	VSUS138	VSUS109
VSUS141	VSUS143	VSUS115
VSUS145	VSUS148	VSUS122
VSUS149	VSUS153	VSUS128
VSUS153	VSUS158	VSUS134
VSUS158	VSUS164	VSUS141
VSUS162	VSUS169	VSUS147
VSUS166	VSUS174	VSUS153
VSUS170	VSUS179	VSUS160
VSUS175	VSUS184	VSUS166
VSUS179	VSUS189	VSUS172
VSUS183	VSUS194	VSUS179
VSUS187	VSUS199	VSUS185
VSUS192	VSUS204	VSUS192
VSUS196	VSUS209	VSUS198
VSUS200	VSUS214	VSUS204
VSUS204	VSUS219	VSUS211
VSUS208	VSUS225	VSUS217
VSUS213	VSUS230	VSUS223
VSUS217	VSUS235	VSUS230
VSUS221	VSUS240	VSUS236
VSUS225	VSUS245	VSUS242
VSUS230	VSUS250	VSUS249
VSUS234	VSUS255	VSUS255
VSUS238	None	None
VSUS242	None	None
VSUS247	None	None
VSUS251	None	None
VSUS255	None	None

<VSUS data readjustment flow chart>

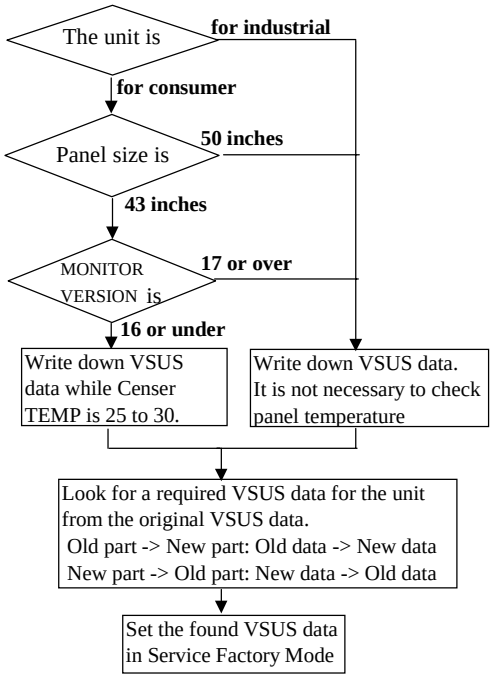

Pioneer

SERVICE INFORMATION

Date:	Jul.30, 2002	**No.:**	**SI-D03015**	**(1/1)**

MODEL No.	*****	**SER.No.**	**S/M No.**	**PG**
SD-532HD5/KBXC	A	R/C	ARP3047	
SD-532HD5/KUXC/CA	A	R/C	ARP3047	
SD-582HD5/KUXC/CA	A	R/C	ARP3047	
PRO-520HD/KUXC/CA	A	R/C	ARP3095	
PRO-620HD/KUXC/CA	A	R/C	ARP3095	
PRO-720HD/KUXC/CA	A	R/C	ARP3095	

	#	**CHANGE**
DETAIL	1	Addition of resistors, transistors and capacitors in SIGNAL Assy (AWV1870, AWV1917).

REASON	1	To prevent crosstalk.

SIGNAL ASSY (AWV1917) COMPONENT BLOCK

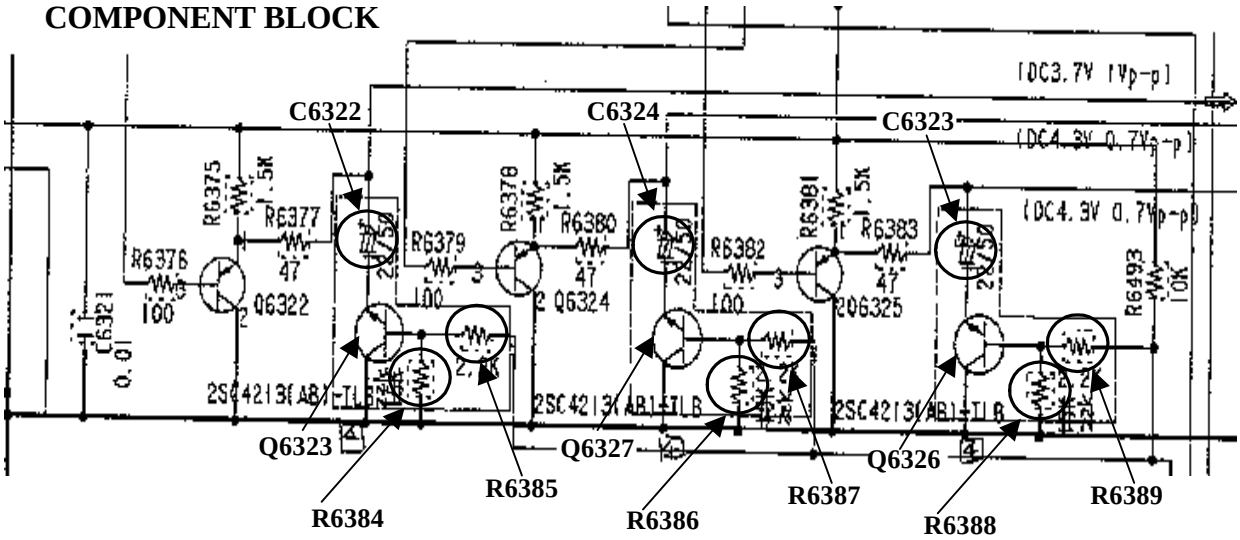

Ref *	**# CURRENT SYMBOL/DESCRIPTION**	**PARTS PART NUMBER**	**CO DE**	**NEW PART NUMBER**	**PARTS SYMBOL/DESCRIPTION**
A	1	Added	-	RS1/16S223J	R6384, R6386, R6388
A	1	Added	-	RS1/16S222J	R6385, R6387, R6389
A	1	Added	-	2SC4213	Q6323, Q6326, Q6327
A	1	Added	-	CEAT220M50	C6322, C6323, C6324

PIONEER CORPORATION

K.MATSUMURA ,MANAGER
DP
Technical Support Group
Service Support Division

NOTE:PARTS CODE
1;Changeable from old to new.
2:Not Interchangeable an all.
3:Interchangeable in both ways
5:Do not use old parts

Memo: SPC56-301 SY18
AA-D3869

Classify:

Pioneer

SERVICE INFORMATION

Date: Aug.2, 2002 **No.:** **SI-D03014-G** **(1/3)**

MODEL No. * **SER.No.** **S/M No.** **PG**

See to following page

	#	DETAIL
SYMPTOM	1	Vibration noise (buzz noise) occurs around Y drive ASSY and / or X drive ASSY.
CAUSE	1	Vibration occur between Y drive/ X drive ASSYs and chassis ASSY
SERVICE REMEDY	1	Insert antivibration sheets (AEC1924: 2 pieces, AEC1923: 4 pieces) between Y drive/X drive ASSY and a panel chassis ASSY.
FACTORY COUNTER -MEASURE	1	Same as service remedy

--- Please see the following pages ---

Ref *	#	CURRENT SYMBOL/DESCRIPTION	PARTS PART NUMBER	CO DE	NEW PART NUMBER	PARTS SYMBOL/DESCRIPTION
A	1		Added	-	AEC1923	Anti-vibration Sheet A
A	1		Added	-	AEC1924	Anti-vibration Sheet B

PIONEER CORPORATION

K.MATSUMURA ,MANAGER
DP
Technical Support Group
Service Support Division

NOTE:PARTS CODE
1:Changeable from old to new.
2:Not Interchangeable an all.
3:Interchangeable in both ways
5:Do not use old parts

Memo: SPC57-225 SY64
AA-D4531

Classify:

MODEL No.	*	SER.No.	S/M No.	PG
PDP-503CMX/LUCB	A	0009221-	ARP3093	
PDP-503MXE/YVLDK	A	0005551-	ARP3093	
PDP-503PE/WYVIO6	A	0002751-	ARP3107	
PDP-503PG/TLDPKBRO	A	0000941-	ARP3117	
PDP-503PU/KUC	A	0003051-	ARP3107	
PDP-503MXE-S/TA	A	0000601-	ARP3120	
PDP-433CMX/LUCBW	A	0003371-	ARP3124	
PDP-433MXE/YVLDK	A	0002001-	ARP3124	
PDP-433PE/WYVIO6	A	0001481-	ARP3111	
PDP-433PG/TLDPKBRO	A	0001141-	ARP3118	
PDP-433PU/KUC	A	0002921-	ARP3111	
PDU-50WX2/TUCYV	A	0000321-	ARP3114	
PDU-43WX2/TUCYV	A	ALL	ARP3121	

The locations of antivibration sheets

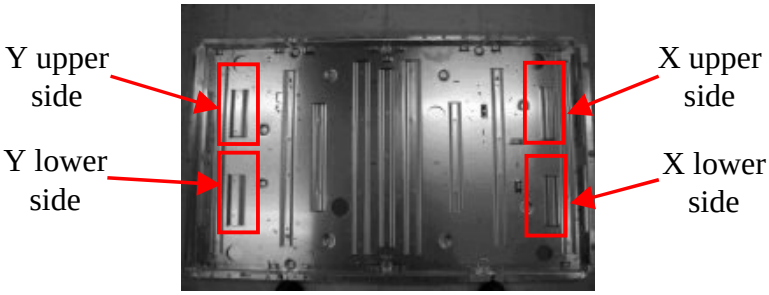

Y upper side

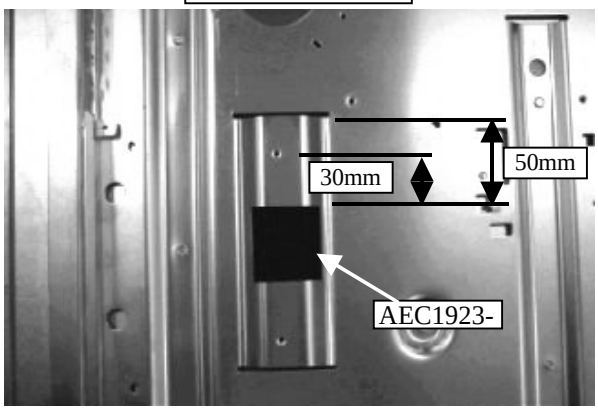

X upper side

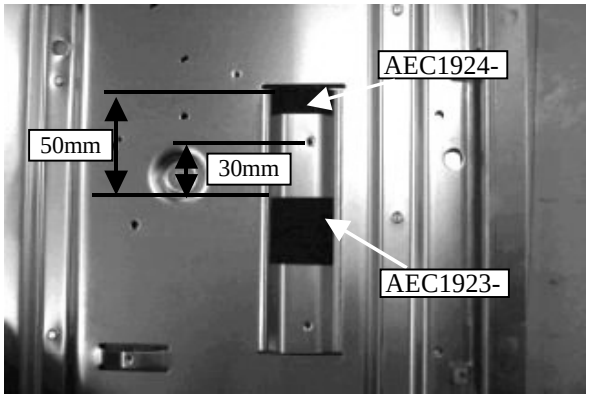

Y lower side

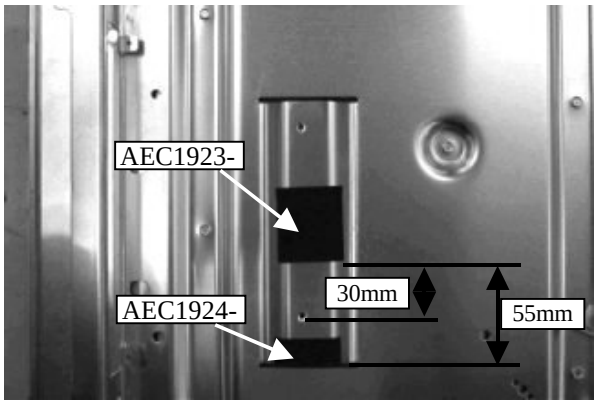

X lower side

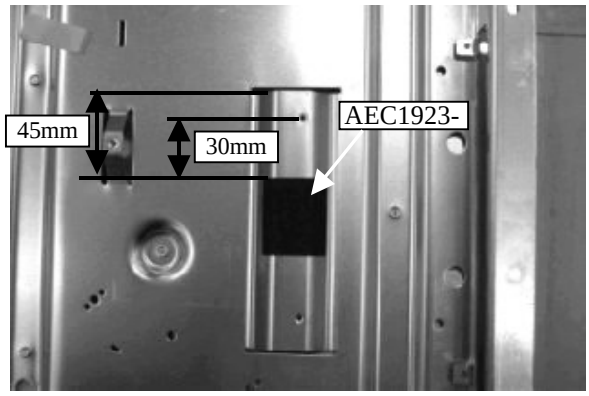

The sheet locations are same as 43 inches model and 50 inches models.

Pioneer

SERVICE INFORMATION

Date: Jun.25, 2002 **No.:** **SI-D03013** **(1/1)**

MODEL No.	*****	**SER.No.**	**S/M No.**	**PG**
PDP-433PE/WYVIO6	A	0001481-	ARP3111	
PDP-433PE/WYVI6XK	B	0003881-	ARP3111	
PDP-433PG/TLDPKBRO	C	0001231-	ARP3118	
PDP-433PU/KUC	D	0002921-	ARP3111	
PDP-433CMX/LUCBW	E	R/C	ARP3124	
PDP-433MXE/YVLDKO	E	R/C	ARP3124	

	#	**CHANGE**
DETAIL	1	Change of Rear Case.
	2	Change of Gascket. Addition and deletion of parts.

REASON Product convenience

Ref *	**#**	**CURRENT SYMBOL/DESCRIPTION**	**PARTS PART NUMBER**	**CODE**	**NEW PART NUMBER**	**PARTS SYMBOL/DESCRIPTION**
A	1	Rear Case (P)	ANE1600	2	ANE1607	Rear Case 43P (FE)
A	2	Gascket A	ANK1694	3	ANK1698	Gascket L43
A	2	Insulation Sheet	AMR3263	3	Delete	
A	2	Screw	ABA1283	3	AMZ30P060FZK	Screw
B	1	Rear Case (P)	ANE1600	2	ANE1607	Rear Case 43P (FE)
B	2	Gascket A	ANK1694	3	ANK1698	Gascket L43
C	1	Rear Case (P)	ANE1600	2	ANE1607	Rear Case 43P (FE)
C	2	Gascket A	ANK1694	3	ANK1698	Gascket L43
C	2	Insulation Sheet	AMR3263	3	Delete	
C	2	Screw	ABA1283	3	AMZ30P060FZK	Screw
D	1	Rear Case (P)	ANE1600	2	ANE1607	Rear Case 43P (FE)
D	2	Gascket A	ANK1694	3	ANK1689	Gascket B
D	2	Insulation Sheet	AMR3263	3	Delete	
D	2	Screw	ABA1283	3	AMZ30P060FZK	Screw
E	1	Rear Case (M)	ANE1601	2	ANE1608	Rear Case 43CMX (FE)
E	2	Gascket A	ANK1694	3	ANK1698	Gascket L43
E	2	Insulation Sheet	AMR3263	3	Delete	
E	2	Screw	ABA1283	3	AMZ30P060FZK	Screw
E	2		Add	3	ANK1699	Gascket S

PIONEER CORPORATION

K.MATSUMURA ,MANAGER
DP
Service Engineering Section
Service Division

NOTE:PARTS CODE
1;Changeable from old to new.
2:Not Interchangeable an all.
3:Interchangeable in both ways
5:Do not use old parts

Memo: AA-D4393 SA71
AA-D4405

Classify:

Pioneer

SERVICE INFORMATION

Date: Jun.27, 2002 **No.:** **SI-D03012-G** **(1/2)**

MODEL No.	*****	**SER.No.**	**S/M No.**	**PG**
PDP-R03E/WYVI6	A	206******	ARP3110	
PDP-R03U/KUC	A	206******	ARP3113	
PDP-R03G/TLDPBR	A	206******	ARP3119	
PDP-R03K/TK	A	206******	-------	

	#	**DETAIL**
SYMPTOM	1	No power.
CAUSE	1	Two resistors for output voltage control in power supply Ass'y are defectively increased.
SERVICE REMEDY	1	Change resistors.
FACTORY COUNTER -MEASURE	1	Same as Service Remedy.

----- Please see the parts location in the schematic back of this page -----

NOTE : If there is a marking sticker of the following colors to a carton box and a rear panel of the unit which is under 206******, the unit already modified at the factory.

PDP-R03E/WYVI6 : GREEN
PDP-R03U/KUC : WHITE
PDP-R03G/TLDPBR : WHITE

Ref *	**#**	**CURRENT SYMBOL/DESCRIPTION**	**PARTS PART NUMBER**	**CO DE**	**NEW PART NUMBER**	**PARTS SYMBOL/DESCRIPTION**
A	1	R707	VRD-HT2EY824J	5	RR-RCR16-824J	R707
A	1	R708	VRD-HT2EY754J	5	RR-RCR16-754J	R708

PIONEER CORPORATION

K.MATSUMURA ,MANAGER
DP
Technical Support Group
Service Support Division

NOTE:PARTS CODE
1:Changeable from old to new.
2:Not Interchangeable an all.
3:Interchangeable in both ways
5:Do not use old parts

Memo: SA71

Classify:

Parts location in power supply Ass'y

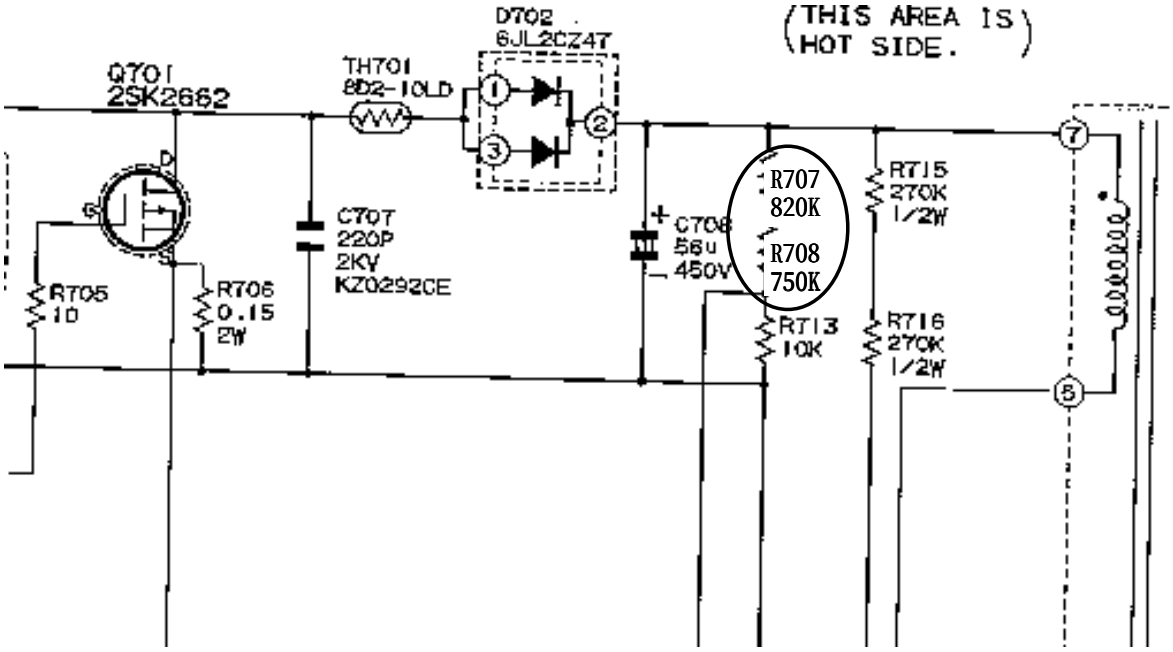

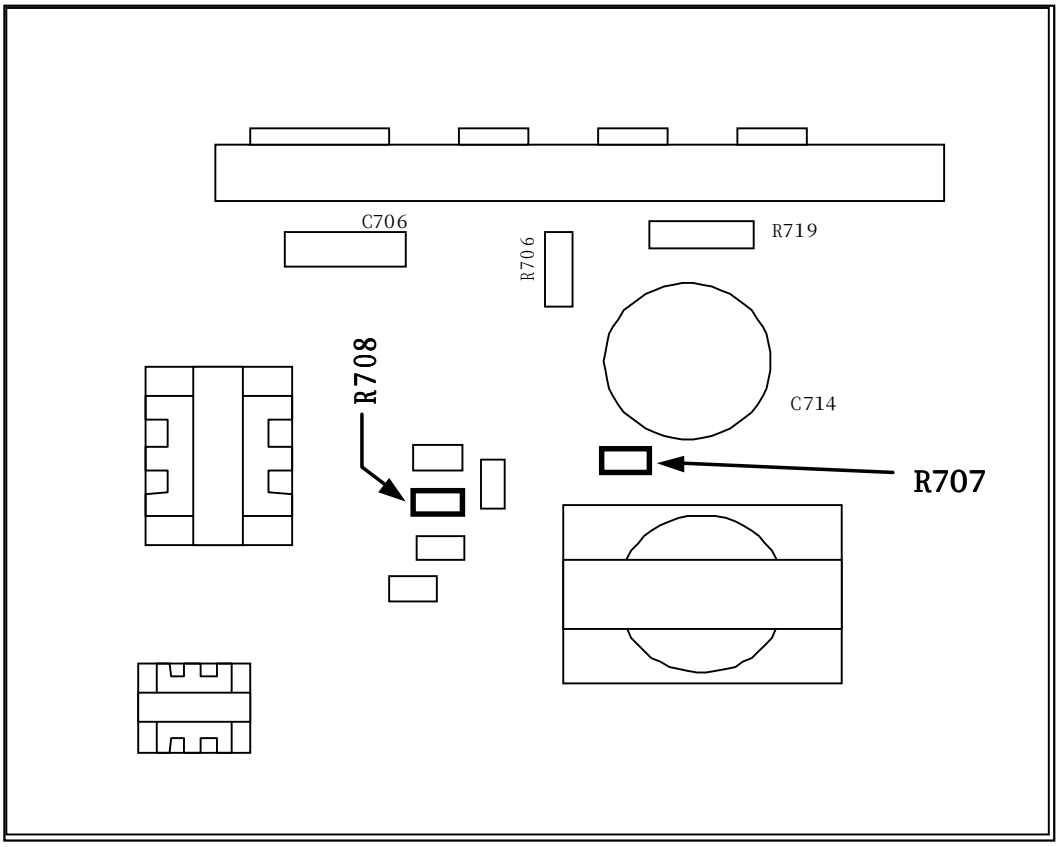

Pioneer

SERVICE INFORMATION

Date: Jun.20, 2002 **No.:** **SI-D03011-G** **(1/2)**

MODEL No.	*	SER.No.	S/M No.	PG
PDP-502MX/LUCBW	A	ALL	ARP3037	
PDP-502MX/LUCBW/1	A	ALL	ARP3078	
PDP-502MXE/YVLDK	A	ALL	ARP3037	
PDP-502MXE/YVLDK/1	A	ALL	ARP3078	
PDP-505HD/KUC	A	ALL	ARP3043	
PDP-505HD/KUC/1	A	ALL	ARP3080	

	#	DETAIL
SYMPTOM	1	No power with pop sound.
CAUSE	1	The cause of this symptom is not clear.
SERVICE REMEDY	1	Change emitter resistance of output FET to prevent expansion damage of the power supply board.
FACTORY COUNTER -MEASURE	1	Only Service Remedy

----- Please see the parts location in the schematic back of this page -----

Note :
This service remedy is not countermeasure for the above mentioned symptom of power supply board.
The aim of this SI is to prevent expansion damage of the power supply board when the above symptom occurs.

Ref *	#	CURRENT SYMBOL/DESCRIPTION	PARTS PART NUMBER	CO DE	NEW PART NUMBER	PARTS SYMBOL/DESCRIPTION
A	1	R312,R363	RS1LMFR22J	5	ACN1157	R312,R363
A	1	R134	ACN1139	5	ACN1160	R134

PIONEER CORPORATION
K.MATSUMURA ,MANAGER
DP
Technical Support Group
Service Support Division

NOTE:PARTS CODE
1;Changeable from old to new.
2:Not Interchangeable an all.
3:Interchangeable in both ways
5:Do not use old parts

Memo: AA-D4471 SA71

Classify:

PDP-502 series
Parts replacement location of power supply ASS'Y
(AWZ6405, AWZ6506)

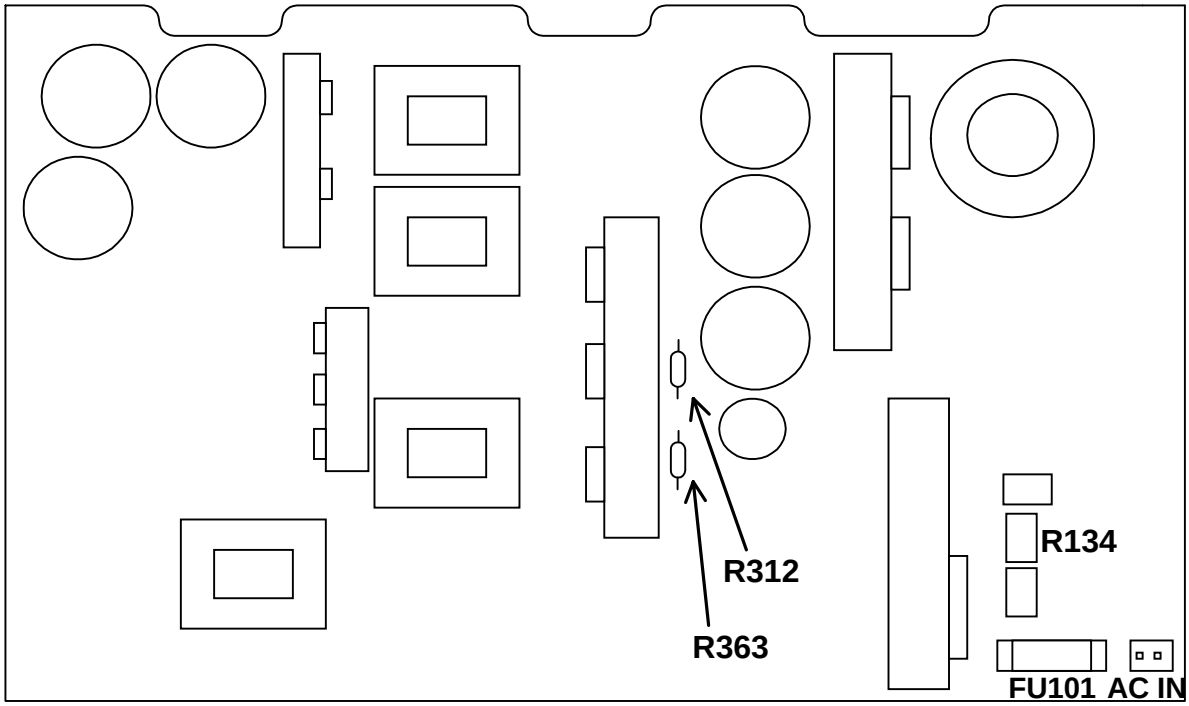

Pioneer

SERVICE INFORMATION

Date: Mar.17, 2003 **No.:** **SI-D03011B-G** **(1/5)**

MODEL No. * **SER.No.** **S/M No.** **PG**

See to following page

	#	DETAIL
SYMPTOM	1,2	Power down failure.
CAUSE	1,2	Solder cracks occur at several lands of resistors and diodes on POWER SUPPLY ASSY.
SERVICE REMEDY	1,2	Please see the following pages.
FACTORY COUNTER -MEASURE		Only Service Remedy

Ref *	#	CURRENT SYMBOL/DESCRIPTION	PARTS PART NUMBER	CO DE	NEW PART NUMBER	PARTS SYMBOL/DESCRIPTION
A	1	Service Power Supply Assy	AWV1775	5	AWV2009	Service Power Supply Assy
B	1	Service Power Supply Assy	AWV1845	5	AWV2010	Service Power Supply Assy
AB	2	R312, R363	RS1LMFR22J	5	ACN1157	R312, R363
AB	2	R134	ACN1139	5	ACN1160	R134
A	2	RCC Control (A) Assy	AWZ6406	5	AWZ6768	RCC Control (A) Assy
A	2	RCC Control (B) Assy	AWZ6407	5	AWZ6769	RCC Control (B) Assy
A	2	RCC Control (C) Assy	AWZ6408	5	AWZ6770	RCC Control (C) Assy
A	2	OTL Control (A) Assy	AWZ6409	5	AWZ6771	OTL Control (A) Assy
B	2	RCC Control (A) Assy	AWZ6507	5	AWZ6773	RCC Control (A) Assy
B	2	RCC Control (B) Assy	AWZ6508	5	AWZ6774	RCC Control (B) Assy
B	2	RCC Control (C) Assy	AWZ6509	5	AWZ6775	RCC Control (C) Assy
B	2	OTL Control (A) Assy	AWZ6510	5	AWZ6776	OTL Control (A) Assy

PIONEER CORPORATION
K.MATSUMURA ,MANAGER
DP
Technical Support Group
Service Support Division

NOTE:PARTS CODE
1:Changeable from old to new.
2:Not Interchangeable an all.
3:Interchangeable in both ways
5:Do not use old parts

Memo: AA-D5027 SY66
AA-D4942
AA-D5001

Classify:

MODEL No.	*	SER.No.	S/M No.	PG
PDP-502MX/LUCBW	A	ALL	ARP3037	
PDP-502MX/LUCBW/1	B	ALL	ARP3078	
PDP-502MXE/YVLDK	A	ALL	ARP3037	
PDP-502MXE/YVLDK/1	B	ALL	ARP3078	
PDP-505HD/KUC	A	ALL	ARP3043	
PDP-505HD/KUC/1	B	ALL	ARP3080	

[Service Remedy]

Case 1) If Power Supply Assy is defective, perform Remedy 1.
Case 2) If Power Supply Assy is not defective (This means that PDP returns to normal operation after you fixed defected parts except Power Supply Assy), perform either Remedy 1 or Remedy 2.

<Remedy_1> Replace Power Supply Assy with a new Assy.

Ref.A: AWV1775 --> AWV2009 Ref.B: AWV1845 --> AWV2010

<Remedy_2> Perform the following jobs.

2-a: Re-solder several resistors and diodes in Main Power Assy.

2-b: Replace RCC Control A Assy, RCC Control B Assy, RCC Control C Assy and OTL Control A Assy with new parts.

2-c: Change emitter resistors of output FET to prevent expansion damage of Power Supply Assy

* After you performed above service remedy, please put an orange seal near the serial number as a mark of this service remedy. In that case, please take care not to overlap to other seals.

New Service Power Supply Assy, AWV2009 and AWV2010, is composed of the following parts.

AWV2009		AWV2010	
Main Power Assy	AWZ6767	Main Power Assy	AWZ6772
RCC Control (A) Assy	AWZ6768	RCC Control (A) Assy	AWZ6773
RCC Control (B) Assy	AWZ6769	RCC Control (B) Assy	AWZ6774
RCC Control (C) Assy	AWZ6770	RCC Control (C) Assy	AWZ6775
OTL Control (A) Assy	AWZ6771	OTL Control (A) Assy	AWZ6776
OTL Control (B) Assy	AWZ6410	OTL Control (B) Assy	AWZ6511
OTL Control (C) Assy	AWZ6411	OTL Control (C) Assy	AWZ6512
VF DD Converter Assy	AWZ6412	* X Cable U Assy	AWZ6514
* X Cable U Assy	AWZ6396	* Y Cable D Assy	AWZ6515
* Y Cable D Assy	AWZ6397		

* Unused parts

Service Remedy 2-a [Re-soldering parts No. in Main power ASSY]
(Ref.A:AWZ6405 / Ref.B:AWZ6506)

R137, R138, R140, R154, R183, R186, R189, R194, R197, R199, R201, R202
R212, R214, R223, R301, R302, R351, R352, R460, R500, R133, D202,

< Re-soldering parts and replacing parts location of POWER SUPPLY ASSY >

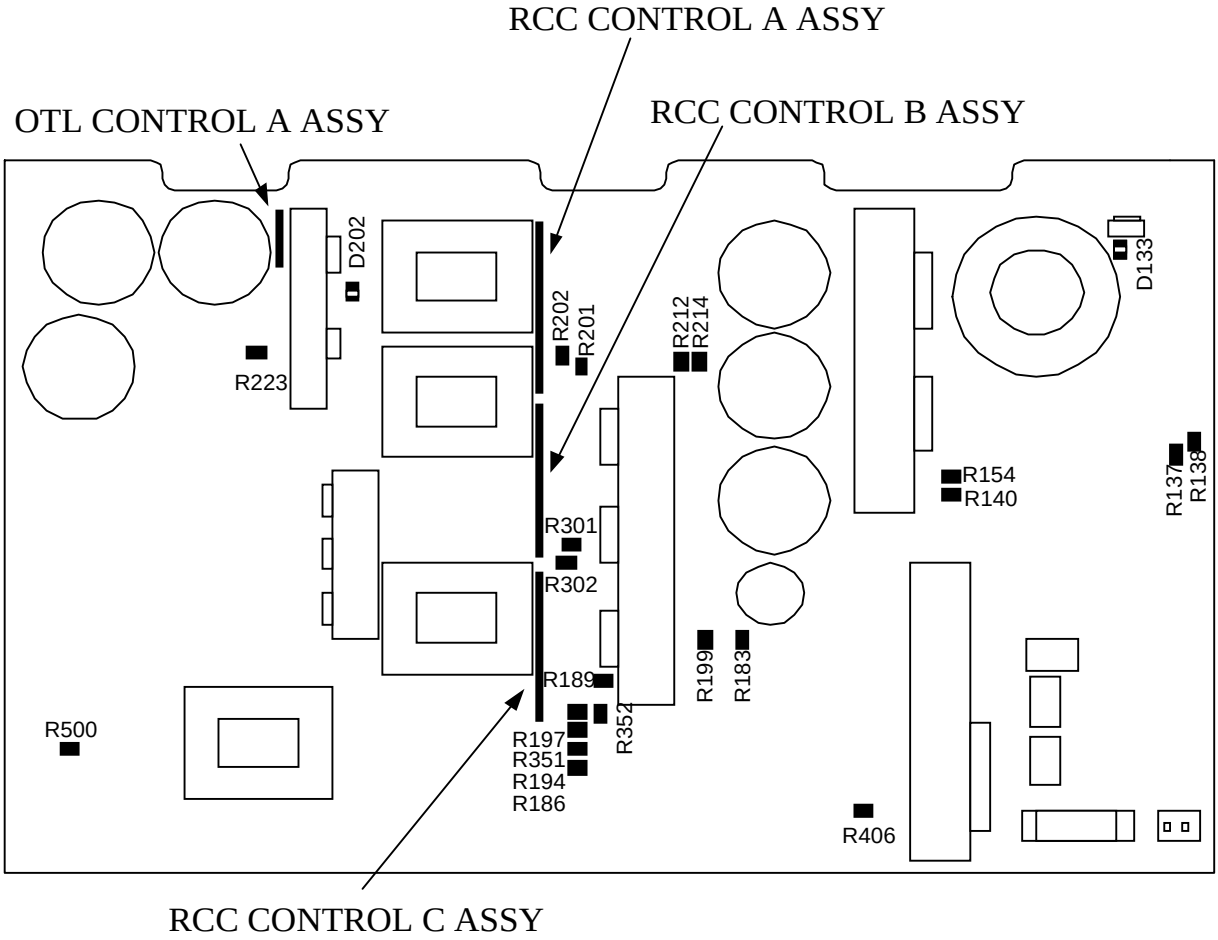

Service Remedy 2-c. [Change resistors / R363, R312 and R134]

This service remedy is not countermeasure for the symptom, "Power down failure". The aim of this service remedy is to prevent expansion damage and pop sound noise of the POWER SUPPLY ASSY when the above symptom occurs.
Please perform this service remedy to normal POWER SUPPLY ASSY only.
In other words, although you perform this service remedy to defective POWER SUPPLY ASSY, it will not be repaired.

PDP-502 series
Replacement parts location of POWER SUPPLY ASS'Y
(Ref. A: AWZ6405, Ref. B: AWZ6506)

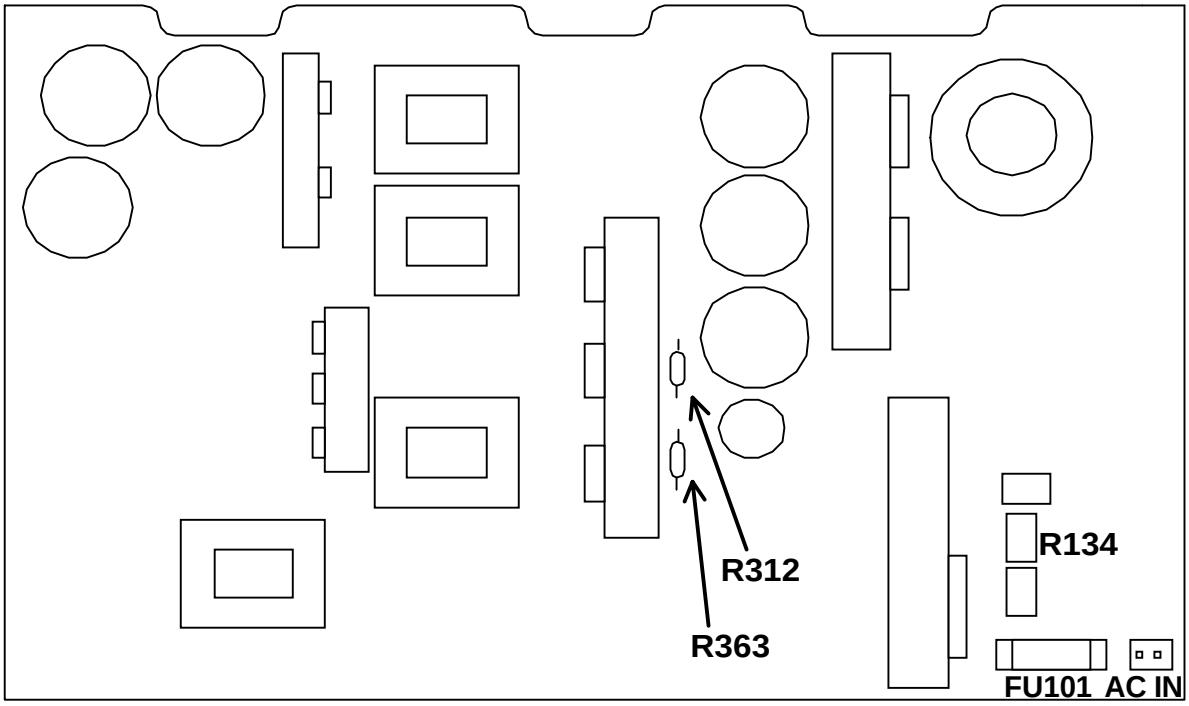

R363, R312	Current part No :	RS1LMFR22J
	New part No :	ACN1157
R134	Current part No :	ACN1139
	New part No :	ACN1160

Pioneer

SERVICE INFORMATION

Date: Feb.10, 2003 **No.:** **SI-D03011A-G** **(1/4)**

MODEL No. * **SER.No.** **S/M No.** **PG**

See to following page

	#	DETAIL
SYMPTOM	1	No power with pop sound.
CAUSE	1	Solder cracks occur at several lands of resistors and diodes on POWER SUPPLY ASSY.
SERVICE REMEDY	1-a	Change emitter resistors of output FET to prevent expansion damage of POWER SUPPLY ASSY.
	1-b	Replace RCC CONTROL A ASSY and RCC CONTROL B ASSY with modified parts.
	1-c	Re-solder several resistors and diodes.
FACTORY COUNTER -MEASURE	1	Only Service Remedy

---- Please see the following pages for the details ----

Ref *	#	CURRENT SYMBOL/DESCRIPTION	PARTS PART NUMBER	CO DE	NEW PART NUMBER	PARTS SYMBOL/DESCRIPTION
AB	1	R312,R363	RS1LMFR22J	5	ACN1157	R312,R363
AB	1	R134	ACN1139	5	ACN1160	R134
A	2			5	AWZ6406	RCC CONTROL A ASSY
A	2			5	AWZ6407	RCC CONTROL B ASSY
B	2			5	AWZ6507	RCC CONTROL A ASSY
B	2			5	AWZ6508	RCC CONTROL B ASSY

PIONEER CORPORATION

K.MATSUMURA ,MANAGER
DP
Technical Support Group
Service Support Division

NOTE:PARTS CODE
1:Changeable from old to new.
2:Not Interchangeable an all.
3:Interchangeable in both ways
5:Do not use old parts

Memo: AA-D4471 SY66
AA-D4892
AA-D4898

Classify:

MODEL No.	*	SER.No.	S/M No.	PG
PDP-502MX/LUCBW	A	ALL	ARP3037	
PDP-502MX/LUCBW/1	B	ALL	ARP3078	
PDP-502MXE/YVLDK	A	ALL	ARP3037	
PDP-502MXE/YVLDK/1	B	ALL	ARP3078	
PDP-505HD/KUC	A	ALL	ARP3043	
PDP-505HD/KUC/1	B	ALL	ARP3080	

Service Remedy 1-a.

This service remedy is not countermeasure for the symptom, "No power with pop sound". The aim of this service remedy is to prevent expansion damage of the POWER SUPPLY ASSY when the above symptom occurs.

Please perform this service remedy to normal POWER SUPPLY ASSY only.

In other words, although you perform this service remedy to defective POWER SUPPLY ASSY, it will not be repaired.

PDP-502 series
Replacement parts location of POWER SUPPLY ASS'Y
(Ref. A: AWZ6405, Ref. B: AWZ6506)

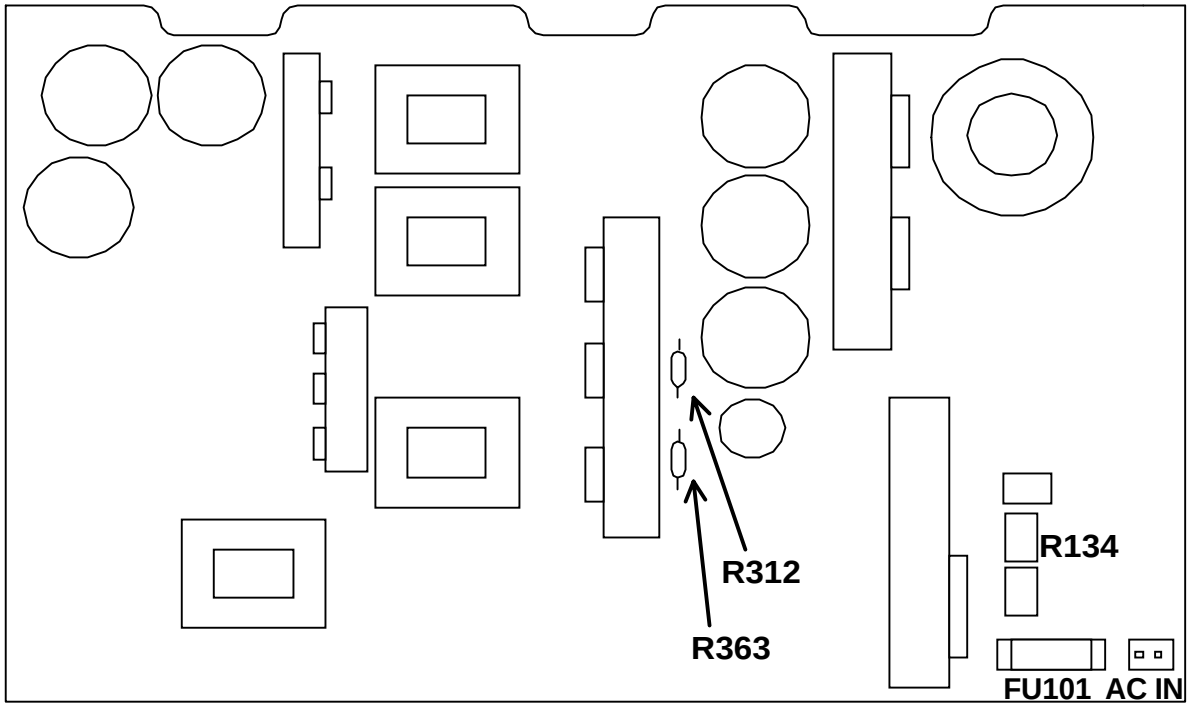

R363, R312	Current part No :	RS1LMFR22J
	New part No :	ACN1157
R134	Current part No :	ACN1139
	New part No :	ACN1160

Service Remedy 1-b [Replacing ASSY No.]

Ref.A :
RCC CONTROL A ASSY : AWZ6406
RCC CONTROL B ASSY : AWZ6407

Ref.B :
RCC CONTROL A ASSY : AWZ6507
RCC CONTROL B ASSY : AWZ6508

*The parts number of above replacing ASSY is not changed although all of stock in WPC(Japan) was modified.

Service Remedy 1-c [Re-soldering parts No.]

In Main power ASSY (Ref.A:AWZ6405 / Ref.B:AWZ6506)
R137, R138, R140, R154, R183, R186, R189, R194, R197, R199, R201, R202
R212, R214, R223, R301, R302, R351, R352, R460, R500, R133, D202,

In RCC CONTROL C ASSY (Ref.A:AWZ6408 / Ref.B:AWZ6509)
R366, R367, R368, D370

In OTL CONTROL A ASSY (Ref.A:AWZ6409 /Ref.B:AWZ6510) R260

< Re-soldering parts location of POWER SUPPLY ASSY >

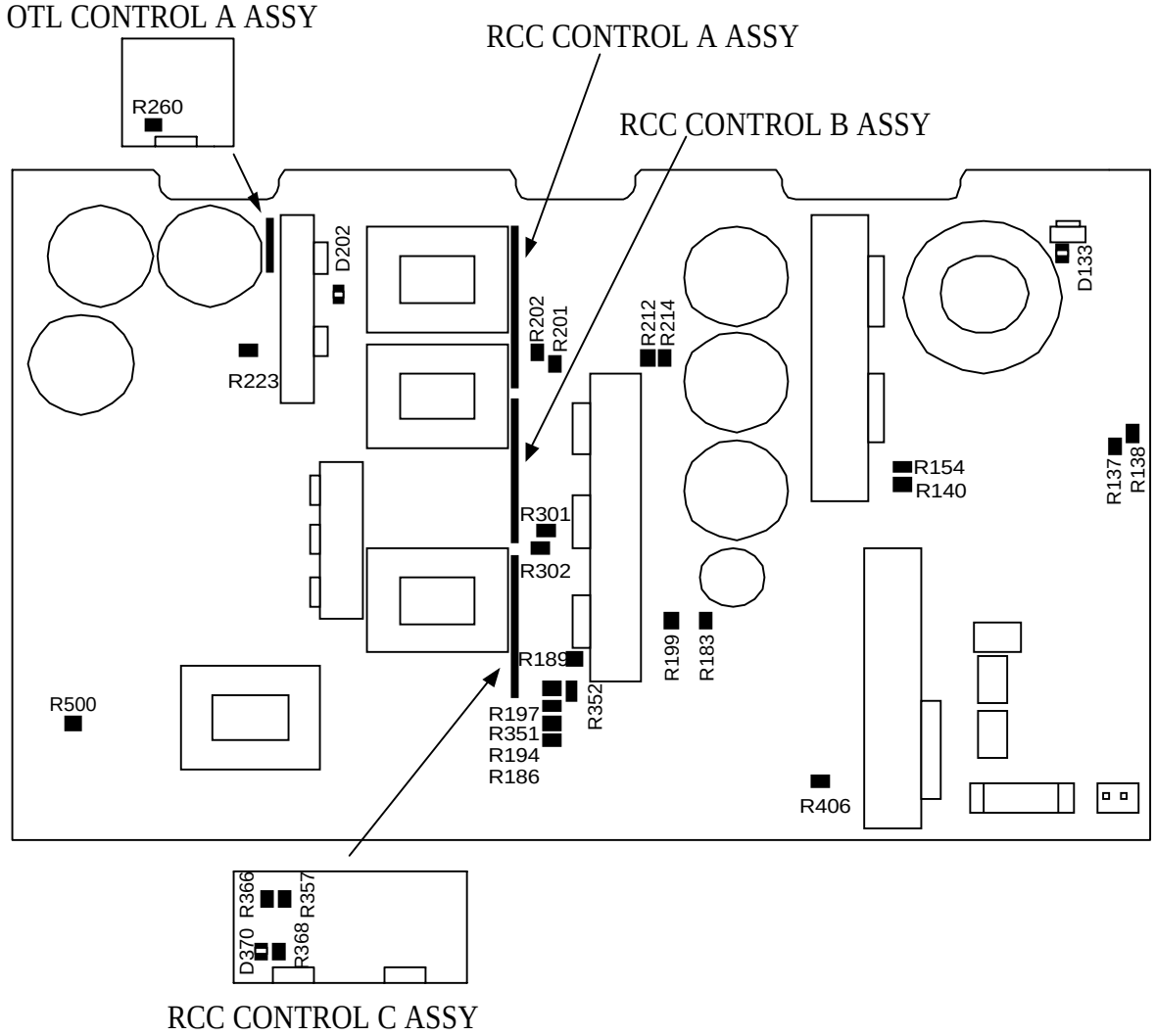

Pioneer

SERVICE INFORMATION

Date: Jun.11, 2002 **No.:** **SI-D03010** **(1/2)**

MODEL No.	*****	**SER.No.**	**S/M No.**	**PG**
PDP-503CMX/LUCBO	A	0008241-	ARP3100	
PDP-503MXE/YVLDK	A	0005521-	ARP3100	
PDP-503MXE-S/TA	A	0000351-	ARP3120	
PDP-503PE/WYVIO6	A	0002681-	ARP3108	
PDP-503PG/TLDPKBRO	A	0000561-	ARP3117	
PDP-503PU/KUC	A	0002271-	ARP3108	
PDP-433CMX/LUCBW	A	0001731-	ARP3124	
PDP-433MXE/YVLDK	A	0001011-	ARP3124	
PDP-433PE/WYVIO6	A	0001451-	ARP3111	
PDP-433PG/TLDPKBRO	A	0000821-	ARP3118	
PDP-433PU/KUC	A	0002531-	ARP3111	

	#	**CHANGE**
DETAIL	1	Delete part of reset PD circuit (X DRIVE_PD) in X DRIVE ASSY.
	1	Change the voltage rating of C3131.
	1	Delete the caution label.
REASON	1	Production convenience.

----- Please see the parts location in the schematic back of this page -----

Ref *	**#**	**CURRENT SYMBOL/DESCRIPTION**	**PARTS PART NUMBER**	**CO DE**	**NEW PART NUMBER**	**PARTS SYMBOL/DESCRIPTION**
A	1	R3177	RS1/16S113J	-	Deleted	
A	1	R3180	RS1/16S153J	-	Deleted	
A	1	R3202,R3203	RS1MMF563J	-	Deleted	
A	1	R3211,R3188	RS1/16S122J	-	Deleted	
A	1	R3189,R3191,R3192	RS1/16S103J	-	Deleted	
A	1	R3190	RS1/16S102J	-	Deleted	
A	1	Q3117	2SJ181L	-	Deleted	
A	1	Q3123	FS2AS-14A-TLB	-	Deleted	
A	1	Q3118	HN1B04FU-TLB	-	Deleted	
A	1	D3130	1SS355-TRB	-	Deleted	
A	1	C3133	CEHAT101M16	-	Deleted	
A	1	C3141,C3134	CEHAT470M16	-	Deleted	
A	1	C3147	CKSRYF104Z50	-	Deleted	
A	1	R3178,R3179	RS2MMF121J	1	RS3LMF121J	R3178,R3179
A	1	C3131	ACG1092	-	Deleted	
A	1		Added	-	CKSRYB473K25	C3137,C3138
A	1	Caution label	AAX2873	-	Deleted	

PIONEER CORPORATION

K.MATSUMURA ,MANAGER
DP
Service Engineering Section
Service Division

NOTE:PARTS CODE
1;Changeable from old to new.
2:Not Interchangeable an all.
3:Interchangeable in both ways
5:Do not use old parts

Memo: SPC57-078 SA71
AA-D4279

Classify:

X DRIVE ASSY (AWV1901, AWV1930)

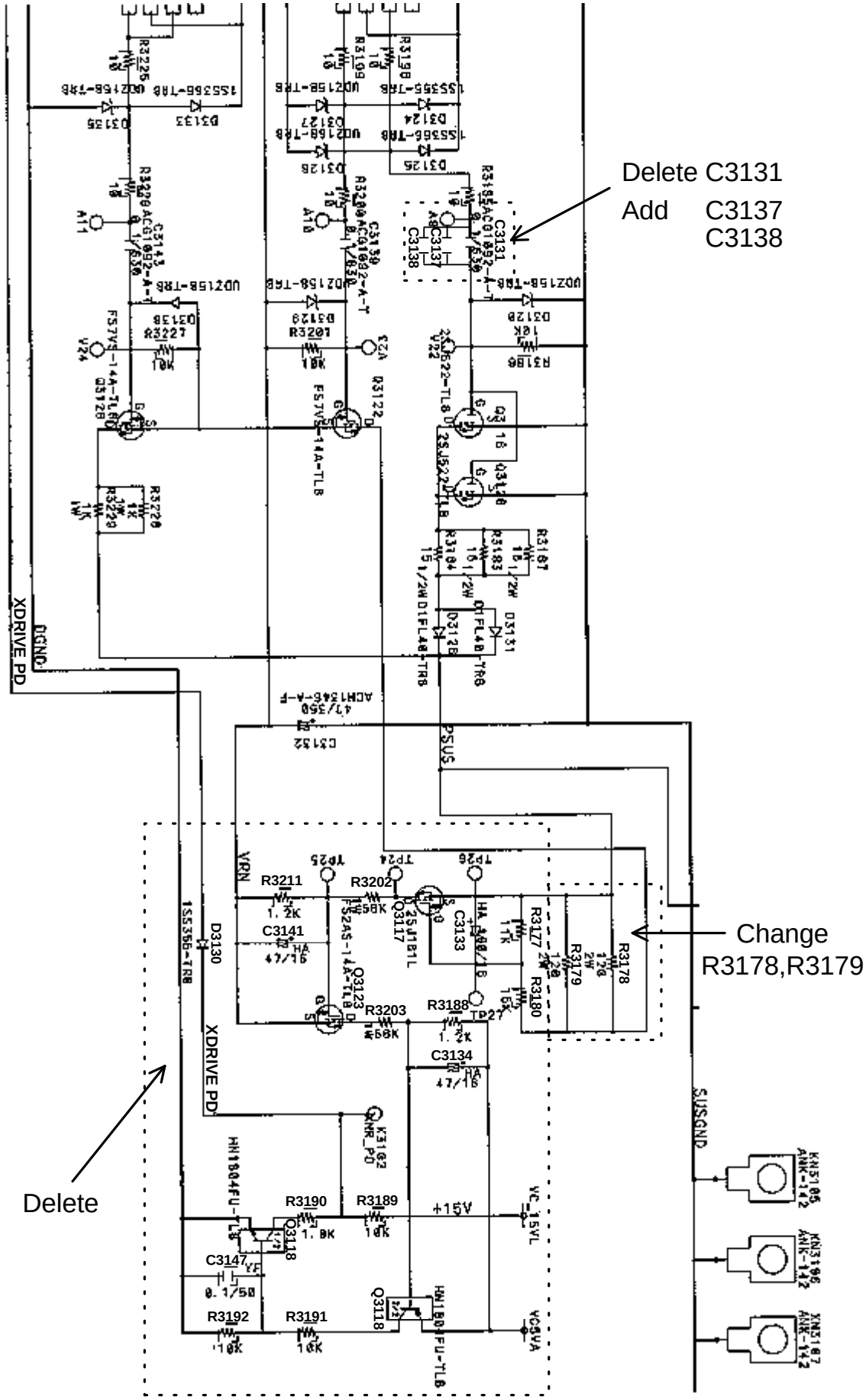

Pioneer

SERVICE INFORMATION

Date: May 31, 2002 **No.:** **SI-D03009** **(1/1)**

MODEL No.	*****	**SER.No.**	**S/M No.**	**PG**
PDP-503PE/WYVI6XK	A	R/C	ARP3107	
PDP-503PE/WYVIO6	A	R/C	ARP3107	
PDP-433PE/WYVI6XK	A	R/C	ARP3111	
PDP-433PE/WYVIO6	A	R/C	ARP3111	

	#	**CHANGE**
DETAIL	1	Added ferrite core filter and installation procedure as accessory.
REASON	1	To reduce radiation (EMI) from power code.

Ref		**CURRENT**	**PARTS**	**CO**	**NEW**	**PARTS**
*****	**#**	**SYMBOL/DESCRIPTION**	**PART NUMBER**	**DE**	**PART NUMBER**	**SYMBOL/DESCRIPTION**
A	1		Add	-	ATX1039	Ferrite core filter
A	1		Add	-	ARM1213	Instruction

PIONEER CORPORATION

K.MATUMURA ,MANAGER
DP
Technical Support Group
Service Support Division

NOTE:PARTS CODE
1;Changeable from old to new.
2:Not Interchangeable an all.
3:Interchangeable in both ways
5:Do not use old parts

Memo: SPC57-063 SA71
AA-D4167

Classify:

Pioneer

SERVICE INFORMATION

Date: May 20, 2002 **No.:** **SI-D03008** **(1/1)**

MODEL No.	*****	**SER.No.**	**S/M No.**	**PG**
PRO-510HD/KUXC/CA	A		ARP3047	
PRO-610HD/KUXC/CA	A		ARP3047	
PRO-710HD/KUXC/CA	A		ARP3065	

	#	**CHANGE**
DETAIL	1	Change main U-COM to reset unit forcibly with detection of SH-D09 abnormal state.
REASON	1	To prevent from hang-up of DTV Tuner when turning on the unit.

Ref		**CURRENT**	**PARTS**	**CO**	**NEW**	**PARTS**
*****	**#**	**SYMBOL/DESCRIPTION**	**PART NUMBER**	**DE**	**PART NUMBER**	**SYMBOL/DESCRIPTION**
A	1	IC2452/Main U-COM	PD5562A	3	PD5562B8	IC2452/Main U-COM
A	1	IC2452/Main U-COM	PD5643A	3	PD5643B8	IC2452/Main U-COM

PIONEER CORPORATION

K.MATUMURA ,MANAGER
DP
Technical Support Group
Service Support Division

NOTE:PARTS CODE
1;Changeable from old to new.
2:Not Interchangeable an all.
3:Interchangeable in both ways
5:Do not use old parts

Memo: MTV01-076 SA71

Classify:

Pioneer

SERVICE INFORMATION

Date: May 17, 2002 **No.:** **SI-D03007** **(1/2)**

MODEL No. * **SER.No.** **S/M No.** **PG**

See to following page

	#	CHANGE
DETAIL	1	Change of parts (Ferrite core) in AWZ6687 (AUDIO AMP ASSY)
REASON	1	Procurement convenience

Ref *	#	CURRENT SYMBOL/DESCRIPTION	PARTS PART NUMBER	CO DE	NEW PART NUMBER	PARTS SYMBOL/DESCRIPTION
A	1	L5001	ATX1037	1	ATX1044	L5001

PIONEER CORPORATION

K.MATSUMURA ,MANAGER
DP
Technical Support Group
Service Support Division

NOTE:PARTS CODE
1;Changeable from old to new.
2:Not Interchangeable an all.
3:Interchangeable in both ways
5:Do not use old parts

Memo: AA-D4373 SA71
AA-D4376

Classify:

MODEL No.	*	SER.No.	S/M No.	PG
PDP-433CMX/LUCBW	A	Running Change	ARP3124	
PDP-433MXE/YVLDK	A	Running Change	ARP3124	
PDP-433PE/WYVIO6	A	Running Change	ARP3112	
PDP-433PE/WYVI6XK	A	Running Change	ARP3112	
PDP-433PG/TLDPKBRO	A	Running Change	ARP3112	
PDP-433PU/KUC	A	Running Change	ARP3112	
PDP-503CMX/LUCBO	A	Running Change	ARP3100	
PDP-503MXE-S/TA	A	Running Change	ARP3100	
PDP-503MXE/YVLDK	A	Running Change	ARP3100	
PDP-503PE/WYVIO6	A	Running Change	ARP3108	
PDP-503PE/WYVI6XK	A	Running Change	ARP3108	
PDP-503PG/TLDPKBRO	A	Running Change	ARP3108	
PDP-503PU/KUC	A	Running Change	ARP3108	

Pioneer

SERVICE INFORMATION

Date: May 15, 2002 **No.:** **SI-D03006** **(1/2)**

MODEL No.	*****	**SER.No.**	**S/M No.**	**PG**
PDP-503CMX/LUCBO	A	007577-	ARP3100	
PDP-503MXE/YVLDK	A	005521-	ARP3100	
PDP-503MXE-S/TA	A	000201-	ARP3120	
PDP-433CMX/LUCBW	A	ALL	ARP3124	
PDP-433MXE/YVLDK	A	ALL	ARP3124	

	#	**CHANGE**
DETAIL	1	Change of parts number of KEY CONNECTOR ASS'Y due to added diodes.
	2	Added capacitors in AWZ6635 and AWZ6636
REASON	1	To prevent failure of KEY SCAN IC caused by static electricity.
	2	To reduce radiation (EMI) from SP cables.

------- Please see the parts location in the schematic back of this page -------

Ref *	**#**	**CURRENT SYMBOL/DESCRIPTION**	**PARTS PART NUMBER**	**CO DE**	**NEW PART NUMBER**	**PARTS SYMBOL/DESCRIPTION**
A	1	KEY CONNECTOR ASS'Y	AWZ6638	2	AWZ6695	KEY CONNECTOR ASS'Y
A	1		Added	-	1SS226	D8304-D8310
A	2		Added	-	CCSRCH101J50	C8163, C8164, C8182, C8183

PIONEER CORPORATION

K.MATSUMURA ,MANAGER
DP
Technical Support Group
Service Support Division

NOTE:PARTS CODE
1;Changeable from old to new.
2:Not Interchangeable an all.
3:Interchangeable in both ways
5:Do not use old parts

Memo: SPC56-673 SA71
AA-D4184

Classify:

KEY CONNECTOR ASS'Y AWZ6695

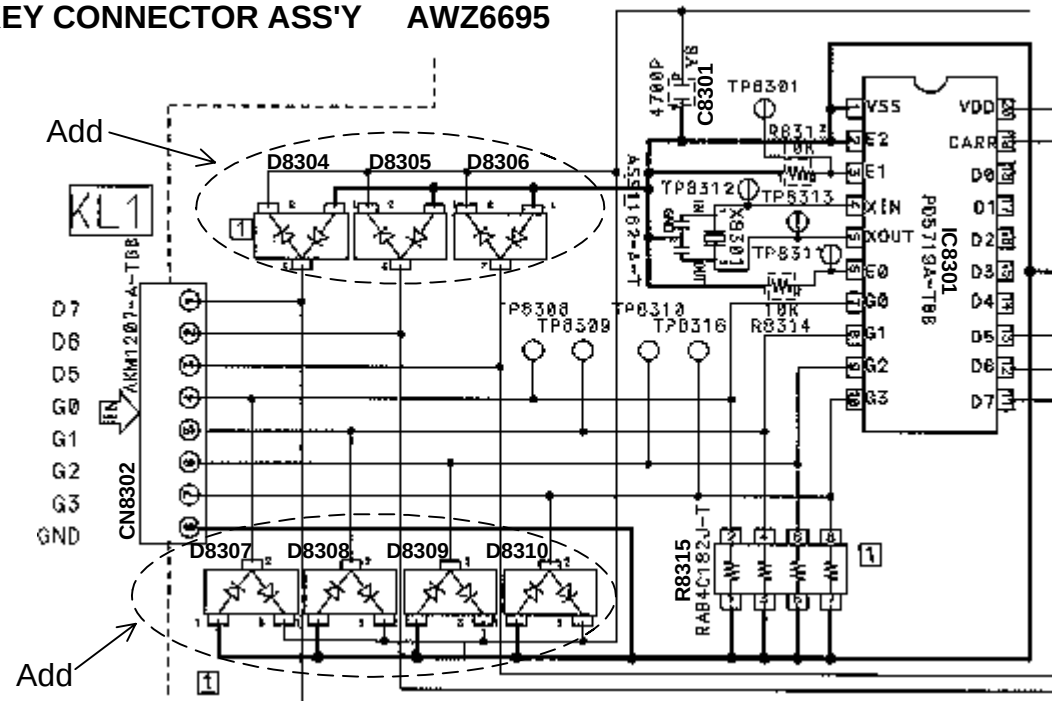

SP TERMINAL(L) ASS'Y AWZ6635

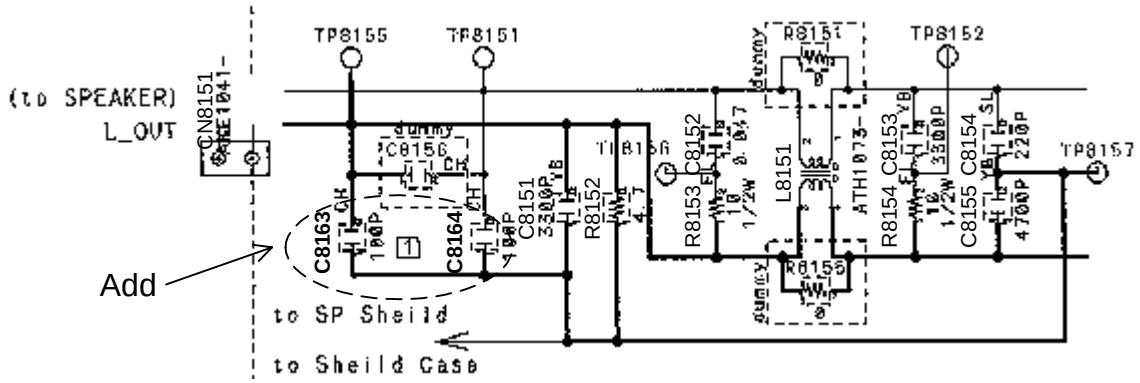

SP TERMINAL(R) ASS'Y AWZ6636

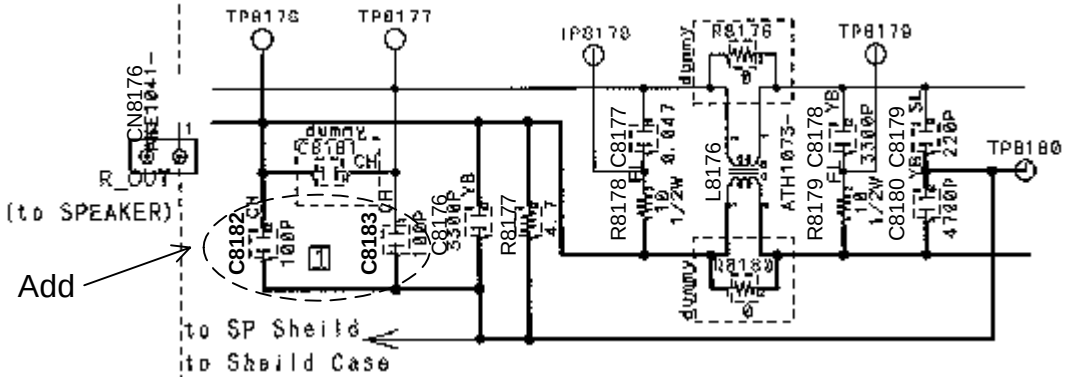

Pioneer

SERVICE INFORMATION

Date: May 13, 2002 **No.:** **SI-D03005** **(1/1)**

MODEL No.	*	SER.No.	S/M No.	PG
PDP-503PE/WYVI6	A	2651-	ARP3108	
PDP-503PG/TLDPKBR	A	301-	ARP3108	
PDP-503PU/KUC	A	1721-	ARP3108	
PDP-433PE/WYVI6	A	1251-	ARP3112	
PDP-433PG/TLDPKBR	A	281-	ARP3112	
PDP-433PU/KUC	A	1641-	ARP3112	

	#	CHANGE
DETAIL	1	Deletion of dew sensor

REASON 1 To prevent from wrong function of dew sensor.

[DETAIL] Please delete the following parts in AWZ6645 and AWZ6683

Symbol		Parts No.	Parts name	Number of parts
	2101	AXX1057	dew sensor	1
D	2101	1SS355-TRB	diode	1
Q	2101	HN1C01FU(YGR)	transistor	1
Q	2102	HN1C01FU(YGR)	transistor	1
R	2101	RS1/16S125J	resistor	1
R	2102	RS1/16S223J	resistor	1
R	2103	RS1/16S333J	resistor	1
R	2104	RS1/16S333J	resistor	1
R	2105	RS1/16S102J	resistor	1
R	2106	RS1/16S103J	resistor	1
R	2107	RS1/16S333J	resistor	1
C	2103	CEHAT1R10M50	electrolytic capacitor	1
CN	2002	KM200NA3	3 pins connector	1
	2001	BMZ20P040FMC	screw	1
	2002	NB20FMC	nut	1

NOTES: If you use AWZ6645 and AWZ6683 as AWZ6707 and AWZ6708, please disconnect dew sensor and connect ADX2789 (short-circuit connector) into CN2002.

Ref *	#	CURRENT SYMBOL/DESCRIPTION	PARTS PART NUMBER	CO DE	NEW PART NUMBER	PARTS SYMBOL/DESCRIPTION
A	1	Y DRIVE ASS'Y	AWZ6645		AWZ6707	Y DRIVE ASS'Y
A	1	Y DRIVE ASS'Y	AWZ6683		AWZ6708	Y DRIVE ASS'Y

PIONEER CORPORATION
K.MATSUMURA ,MANAGER
DP
Technical Support Group
Service Support Division

NOTE:PARTS CODE
1;Changeable from old to new.
2:Not Interchangeable an all.
3:Interchangeable in both ways
5:Do not use old parts

Memo: SPC56-675 SA71
AA-D4315

Classify:

Pioneer

SERVICE INFORMATION

Date: May 13, 2002 **No.:** **SI-D03004** **(1/1)**

MODEL No.	*****	**SER.No.**	**S/M No.**	**PG**
PDP-433PE/WYVI06	A	001101-	ARP2112	
PDP-433PE/WYVI6XK	A	002501-	ARP3112	
PDP-433PG/TLDPKBR0	A	000281-	ARP3112	
PDP-433PU/KUC	A	001637-	ARP3112	
PDP-503PE/WYVI06	A	002651-	ARP3108	
PDP-503PE/WYVI6XK	A	002181-	ARP3108	
PDP-503PG/TLDPKBR0	A	000261-	ARP3108	
PDP-503PU/KUC	A	001621-	ARP3108	

	#	**CHANGE**
DETAIL	1	Changed part number of MR Interface ASSY due to changed the system cable connector (CN4002).
REASON	1	To prevent uncompleted connection between CN4002 and a system cable.

Due to changed CN4002 (AKP1227→ AKP1194), you can not use original screws.

Thus, you have to use two new screws (PMZP080FZK) for installation of new MR Interface ASSY.

Ref *	**#**	**CURRENT SYMBOL/DESCRIPTION**	**PARTS PART NUMBER**	**CO DE**	**NEW PART NUMBER**	**PARTS SYMBOL/DESCRIPTION**
A	1	MR INTERFACE ASSY	AWZ6645	1	AWZ6699	MR INTERFACE ASSY
A	1	SCREW	PMZ26P030FZK	5	PMZ26P080FZK	SCREW

PIONEER CORPORATION

K.MATSUMURA ,MANAGER
DP
Technical Support Group
Service Support Division

NOTE:PARTS CODE
1;Changeable from old to new.
2:Not Interchangeable an all.
3:Interchangeable in both ways
5:Do not use old parts

Memo: SPC56-238 MS71
AA-D4271

Classify:

Pioneer

SERVICE INFORMATION

Date: May.14, 2002 **No.:** **SI-D03002-G** **(1/2)**

MODEL No.	*****	**SER.No.**	**S/M No.**	**PG**
PDP-433PE/WYVIO6	A	1101-	ARP3111	
PDP-433PG/TLDPKBRO	A	0281-	ARP3118	
PDP-433PU/KUC	A	1641-	ARP3111	

	#	**DETAIL**
SYMPTOM	1	When the back of a unit is lit up with sunshine, the sunshine appears to right side and left side on the panel.
CAUSE	1	There are necessary vent holes on the rear chassis of a unit. The sunshine appears in through these vent holes of the rear chassis.
SERVICE REMEDY	1	Putting rear corner labels.
FACTORY COUNTER -MEASURE	1	Same as the service remedy.

--- Please see the back of this page ---

Ref		**CURRENT**	**PARTS**	**CO**	**NEW**	**PARTS**
*****	**#**	**SYMBOL/DESCRIPTION**	**PART NUMBER**	**DE**	**PART NUMBER**	**SYMBOL/DESCRIPTION**
A	1		Added	-	AAX2862	Rear corner label
A	1		Added	-	AMR3313	Shade board

PIONEER CORPORATION

K.MATSUMURA ,MANAGER
DP
Technical Support Group
Service Support Division

NOTE:PARTS CODE
1:Changeable from old to new.
2:Not Interchangeable an all.
3:Interchangeable in both ways
5:Do not use old parts

Memo: AA-D4260 MS71
AA-D4270

Classify:

The Location of Rear Corner Label / Shade Board and The Procedure of Installation

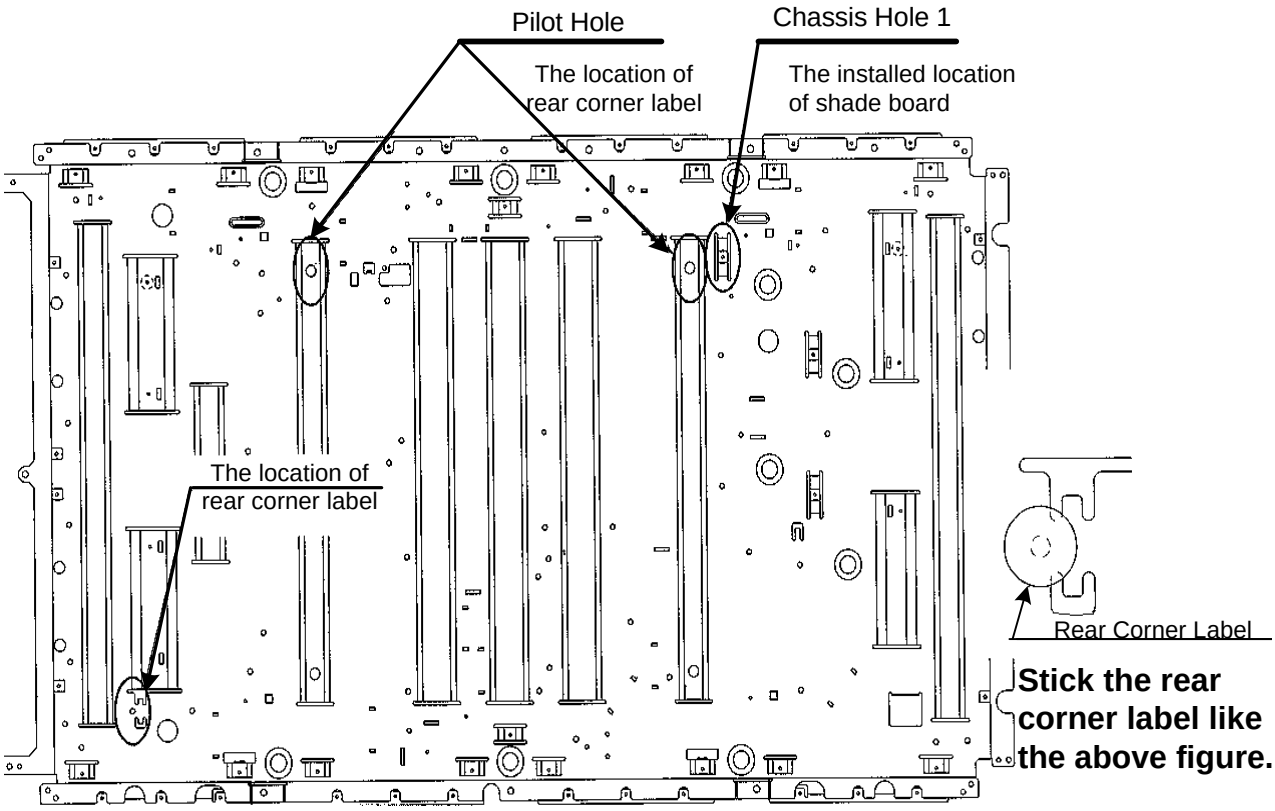

Stick the rear corner label like the above figure.

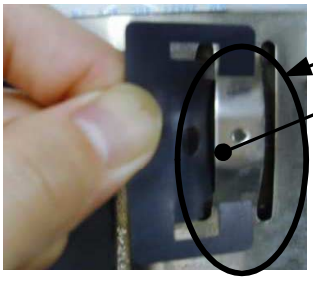

Picture 1

1: Press location A of shade board to location C of Chassis Hole 1 refereeing to the Picture1.

Shade board

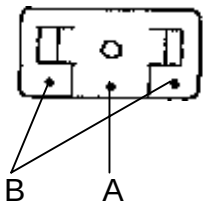

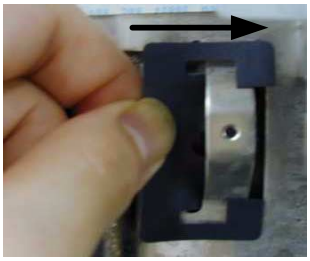

Picture 2

2: Insert the shade board to right.

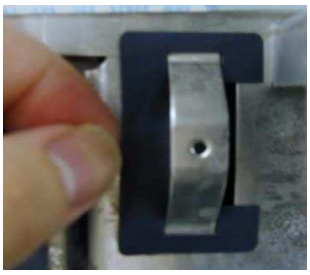

Picture 3

3: Install the shade board like the Picture 3.

Pioneer

SERVICE INFORMATION

Date: Apr.10, 2002 **No.:** **SI-D03001-G** **(1/2)**

MODEL No.	*****	**SER.No.**	**S/M No.**	**PG**
PDP-503PE/WYVIO6	A	002601-	ARP3107	
PDP-503PG/TLDPKOB6	A	ALL	APR3117	
PDP-503PU/KUC	A	001001-	ARP3107	
PDP-503PE/WYVI6XK	A	001581-	ARP3107	

	#	**DETAIL**
SYMPTOM	1	When the back of a unit is lit up with sunshine, the sunshine appears to right side and left side on the panel.
CAUSE	1	There are necessary vent holes on the rear chassis of a unit. The sunshine appears in through these vent holes of the rear chassis.
SERVICE REMEDY	1	Putting rear corner labels.
FACTORY COUNTER -MEASURE	1	Same as the service remedy.

[The location of putting rear corner labels]

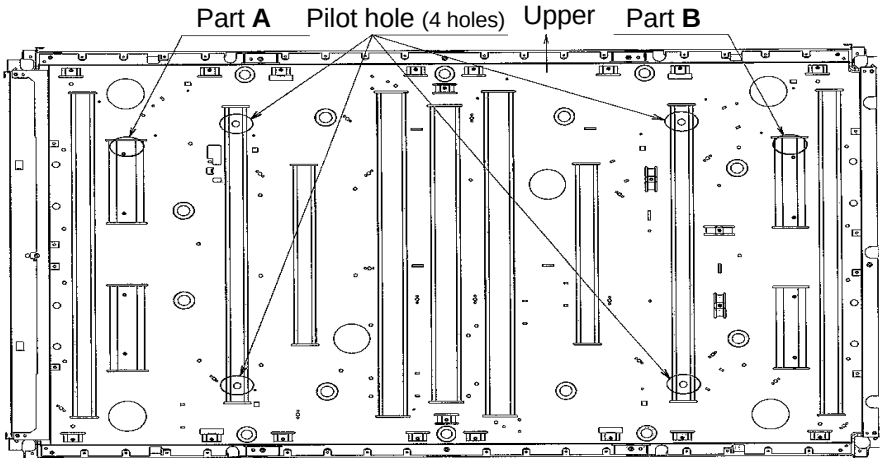

Ref		**CURRENT**	**PARTS**	**CO**	**NEW**	**PARTS**
*****	**#**	**SYMBOL/DESCRIPTION**	**PART NUMBER**	**DE**	**PART NUMBER**	**SYMBOL/DESCRIPTION**
A	1		Add	-	AAX2862	rear corner label

PIONEER CORPORATION

K.MATSUMURA ,MANAGER
DP
Technical Support Group
Service Support Division

NOTE:PARTS CODE
1:Changeable from old to new.
2:Not Interchangeable an all.
3:Interchangeable in both ways
5:Do not use old parts

Memo: AA-D4199 SA71

Classify:

[The detail of part **A**]

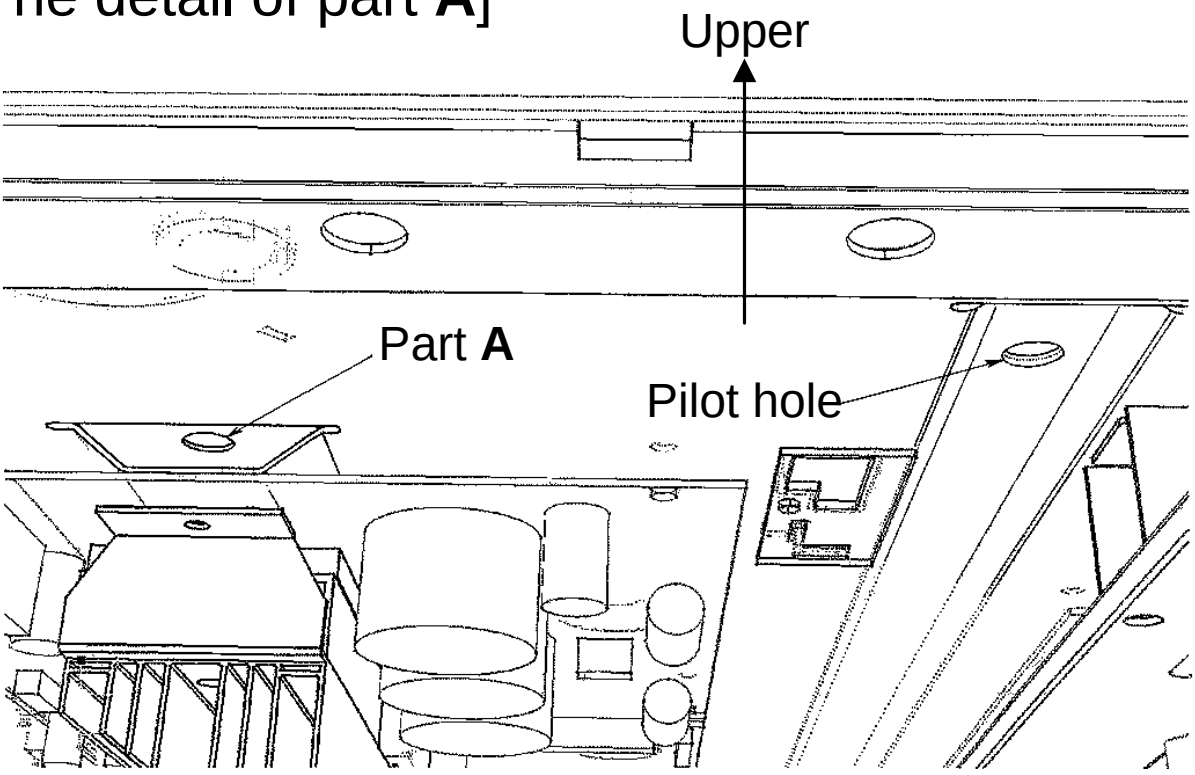

[The detail of part **B**]

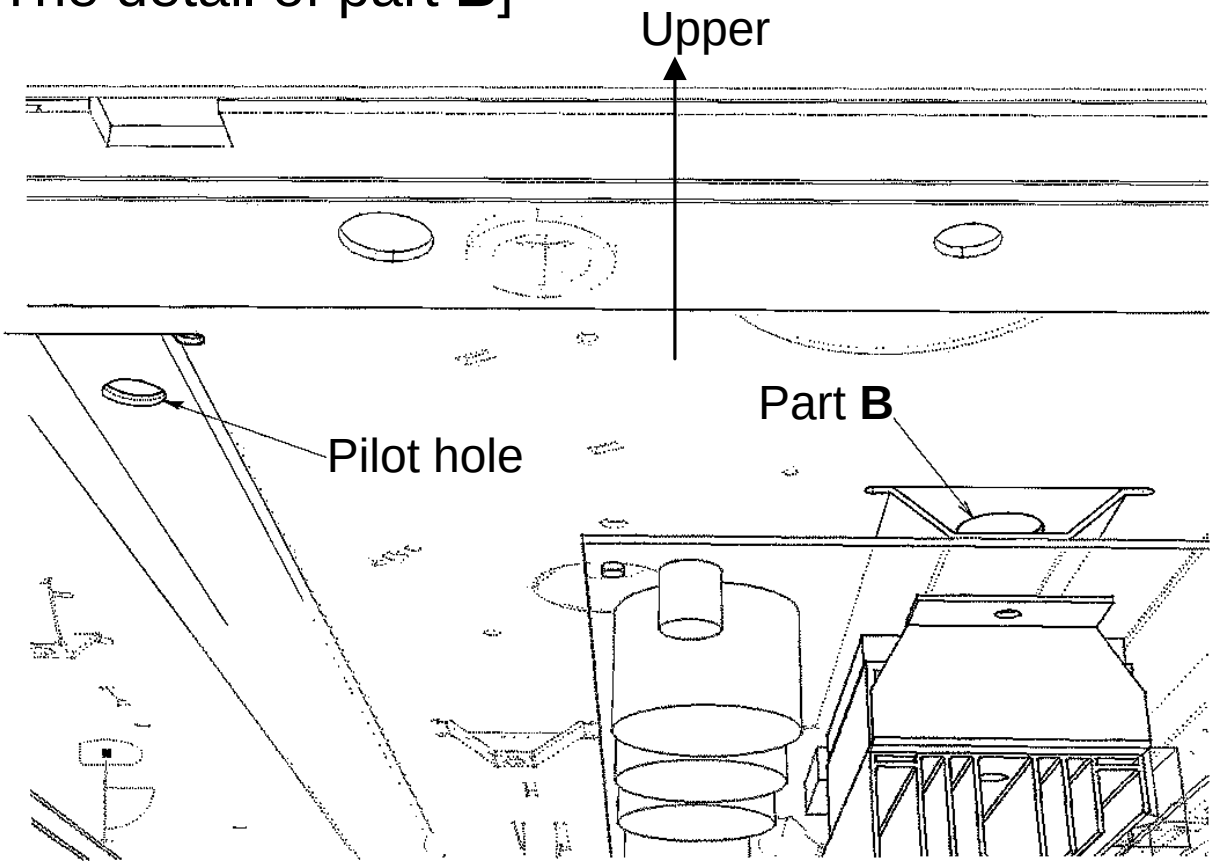

Pioneer

SERVICE INFORMATION

Date: April 3, 2002 **No.:** **SI-D02023-G** **(1/1)**

MODEL No.	*****	**SER.No.**	**S/M No.**	**PG**
PRO-520HD/KUXC/CA	A	R/C	ARP3095	42
PRO-620HD/KUXC/CA	A	R/C	ARP3095	42
PRO-720HD/KUXC/CA	A	R/C	ARP3095	42

	#	**DETAIL**
SYMPTOM	1	Color noise occurs in case of inputting a video signal to any "S-VIDEO" inputs
CAUSE	1	Chroma signal is jumping onto power suply line (9V)
SERVICE REMEDY	1	Add R7080 (0 ohm) resistance between L7021 at 3D Y/C BLOCK in SIGNAL ASSY (Or making a short-circuit)
FACTORY COUNTER -MEASURE	1	Same as the service remedy

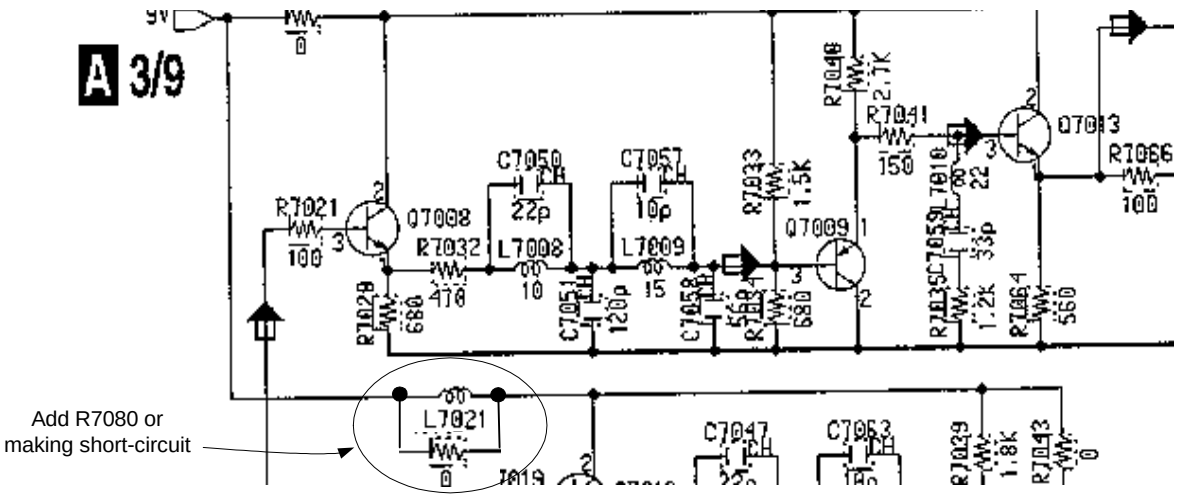

Ref *	**#**	**CURRENT SYMBOL/DESCRIPTION**	**PARTS PART NUMBER**	**CO DE**	**NEW PART NUMBER**	**PARTS SYMBOL/DESCRIPTION**
A	1		Added	-	RS1/16S0R0J-T	R7080

PIONEER CORPORATION

K.MATSUMURA ,MANAGER
DP
Technical Support Group
Service Support Division

NOTE:PARTS CODE
1:Changeable from old to new.
2:Not Interchangeable an all.
3:Interchangeable in both ways
5:Do not use old parts

Memo: SPC56-631 MS71
AA-D4263

Classify:

Pioneer

CORRECTION OF SERVICE MANUAL

Date: Mar.29,2002 **No.:** **SI-D02022** **(1/2)**

MODEL No.	S/M No.	PG	MODEL No.	S/M No.	PG
PDP-503PE/WYVI6	ARP3107		PDP-503PU/KUC	ARP3107	

Please correct your service manual

--- Please see the back of this page ---

PIONEER CORPORATION

K.MATSUMURA ,MANAGER
DP
Technical Support Group
Service Support Division

Memo: SA71

6.2 ADJUSTMENT REQUIRED WHEN THE SET IS REPAIRED OR REPLACED

Page 63

[OLD]

Y DRIVE Assy
*** When replaced**
1.SUSB ground timing adjustment
2.Panel white balance adjustment

X DRIVE Assy
*** When replaced**
1.SUSB ground timing adjustment
2.Panel white balance adjustment

[NEW]

Y DRIVE Assy
*** When replaced**
1.Panel white balance adjustment

X DRIVE Assy
*** When replaced**
1.Panel white balance adjustment

[ADDITION]

SERVICE PANEL Assy

Page 63

*** When you replace service Panel Assy**

Adjustment 1: SUS-B Ground Timing Adjustment

Adjustment 2: VSUS Adjustment

All of service panels have a panel identification label (Vsus data, Vofs data). Please just input this V-SUS data on the label to "VSUS" on page 12/13 or 16/17 of service factory mode by remote control. (Please refer to the page 61 of S/M)

Adjustment 3: VOFS Adjustment

Please just input the V-OFS data on the label to "VOFS" on page 12/13 or 16/17 of service factory mode. (Please refer to the page 61 of S/M)

Adjustment 4: Panel White Balance Adjustment

6.3.2 Main Unit Adjustment

VOFS/VH/IC5V Voltage Adjustment

Page 64

[OLD]

Input Signal	Adjusting Point	Adjusting Method
White 100%	VR2703(VH) (Y DRIVE Assy)	**VH (voltage for scan IC) Adjustment** Adjust so that the voltage between K2716 (VH) and K2720 (PSUS) becomes **103V** ± 0.5V.

[NEW]

Input Signal	Adjusting Point	Adjusting Method
White 100%	VR2703(VH) (Y DRIVE Assy)	**VH (voltage for scan IC) Adjustment** Adjust so that the voltage between K2716 (VH) and K2720 (PSUS) becomes **130V** ± 0.5V.

Pioneer

SERVICE INFORMATION

Date: Apr.4,2002 **No.:** **SI-D02021** **(1/4)**

MODEL No. * **SER.No.** **S/M No.** **PG**

See to following page

	#	CHANGE
DETAIL	1	See the following details.
REASON	1	Production convenience

[DETAILS]

1. Change the value of the following resistances
   R2541, R2543 : 1.0Kohm --> 100ohm

2. Delete the following parts
   IC2512, IC2513
   R2512, R2533, R2574, R2575
   C2515, C2516
   CN2202, CN3102

3. Add resistances
   R2576, R2577

See the parts location in the schematic back of this page :

Ref *	#	CURRENT SYMBOL/DESCRIPTION	PARTS PART NUMBER	CO DE	NEW PART NUMBER	PARTS SYMBOL/DESCRIPTION
A	1	R2541, R2543	RS1/16S102J	2	RS1/16S101J	R2541, R2543
A	1	R2512, R2533	RS1/16S471J	-	Deleted	
A	1	IC2512, IC2513	HCPL-M611-TLB	-	Deleted	
A	1	C2515, C2516	CKSRYF104Z50	-	Deleted	
A	1	R2574, R2575	RS1/16S0R0J	-	Deleted	
A	1		Added	-	RS1/16S0R0J	R2576, R2577
A	1	CN2202, CN3102	KM250MA3	-	Deleted	

PIONEER CORPORATION

K.MATSUMURA ,MANAGER
DP
Technical Support Group
Service Support Division

NOTE:PARTS CODE
1;Changeable from old to new.
2:Not Interchangeable an all.
3:Interchangeable in both ways
5:Do not use old parts

Memo: AA-D4191 SA71
AA-D4231

Classify:

MODEL No.	*	SER.No.	S/M No.	PG
PDP-433PE/WYVI6	A	R/C	ARP3111	
PDP-433PG/TLDPKBR	A	R/C	ARP3118	
PDP-433PU/KUC	A	R/C	ARP3111	
PDP-503PE/WYVI6	A	R/C	ARP3108	
PDP-503PG/TLDPKBR	A	R/C	ARP3117	
PDP-503PU/KUC	A	R/C	ARP3108	
PDP-503PE/WYVI6XK	A	R/C	ARP3108	
PDU-50WX2/TUCYV	A	R/C	ARP3115	

Y DRIVE ASS'Y AWZ6683 (433 series) / AWZ6645 (503 series) (3/4)

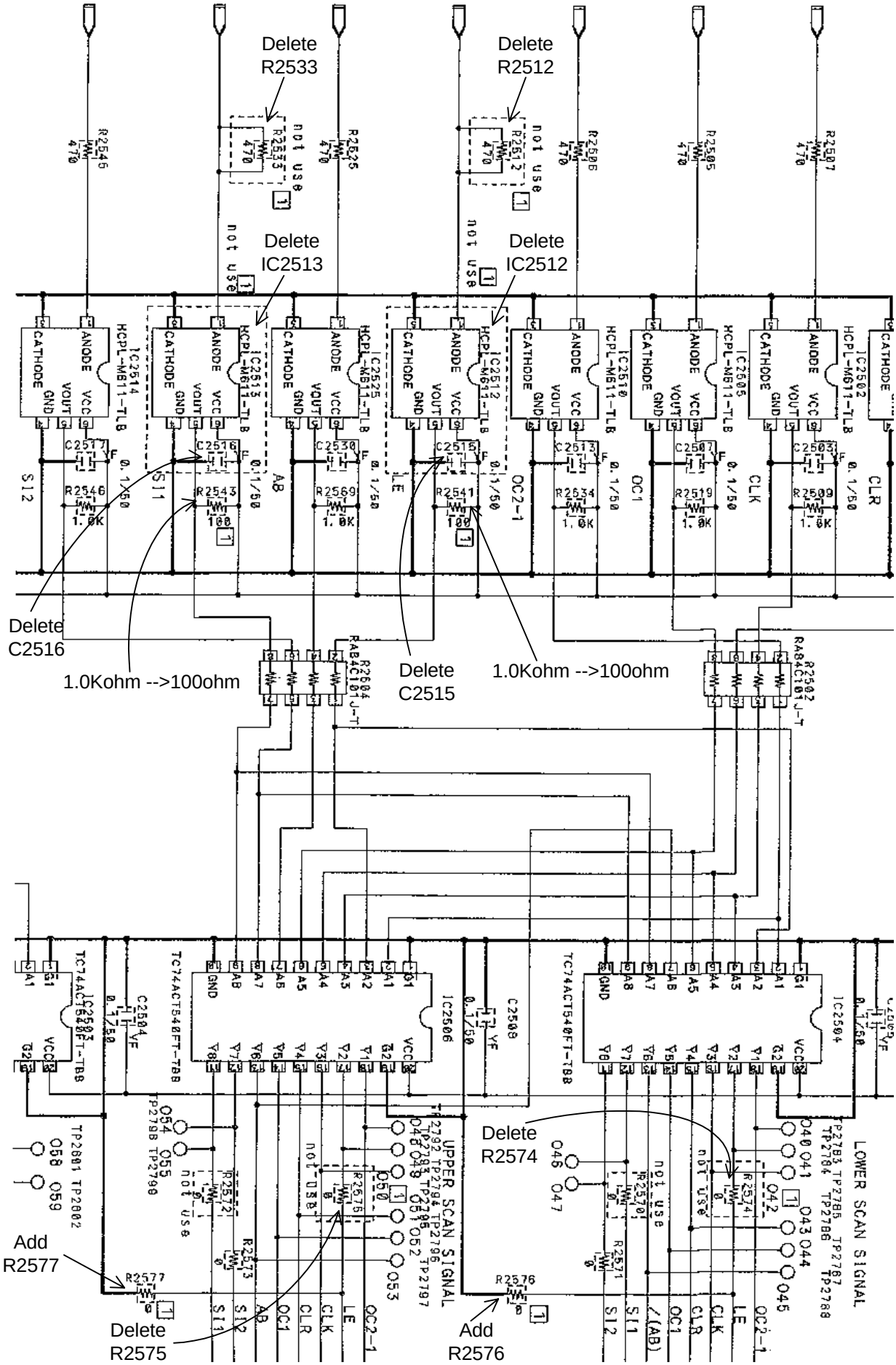

Y DRIVE ASS'Y AWZ6683 (433 series) / AWZ6645 (503 series)

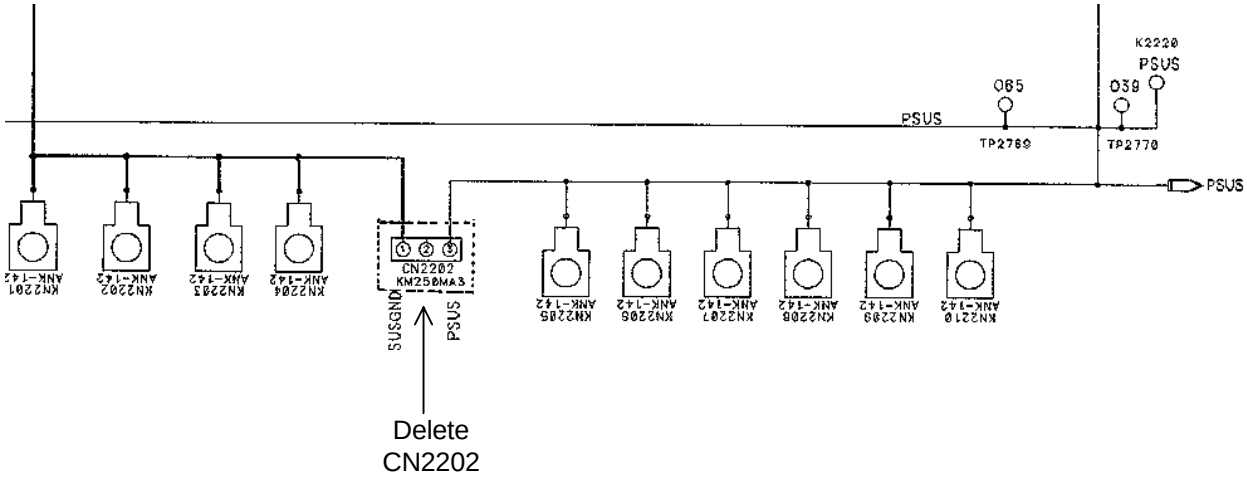

X DRIVE ASS'Y AWV1930 (433 series) / AWV1901 (503 series)

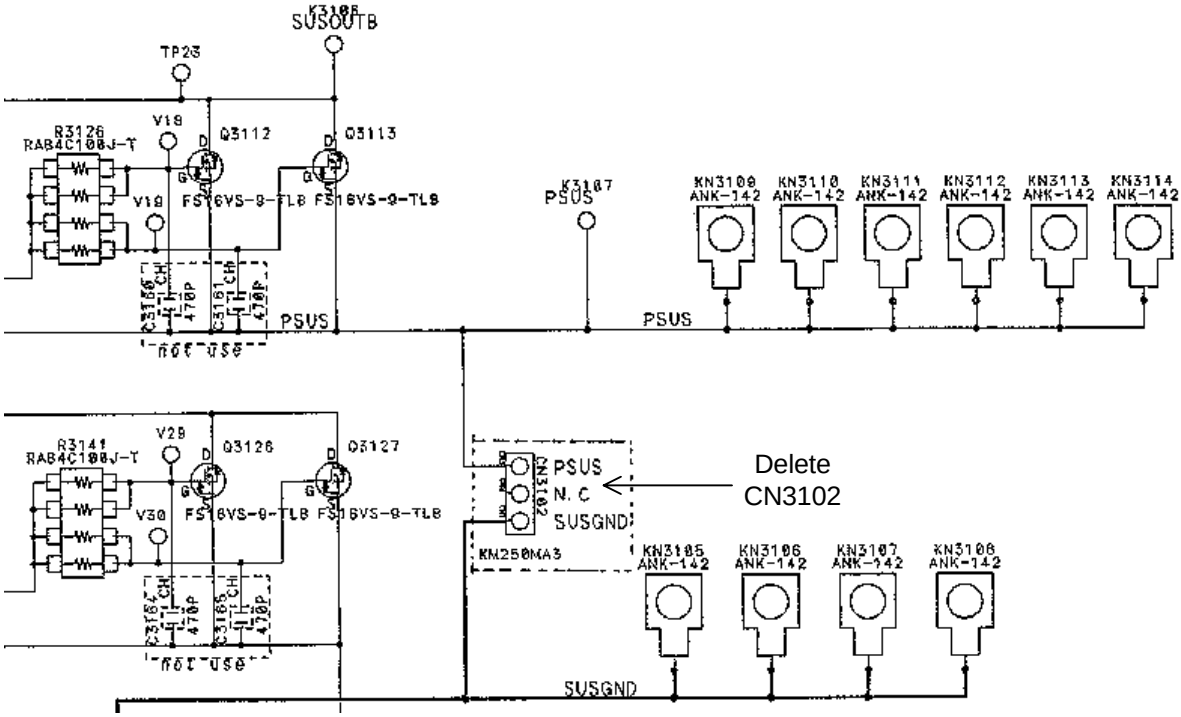

Pioneer

CORRECTION OF SERVICE MANUAL

Date: Mar.25,2002 **No.:** **SI-D02020** **(1/4)**

MODEL No.	**S/M No.**	**PG**	**MODEL No.**	**S/M No.**	**PG**
PDP-503CMX/LUCB	ARP3093		PDP-503MXE/YVLDK	ARP3093	

Please correct your service manual

	Mark	No.	Description	Part No.	PG.
Add	NSP	1	ADR CONNECT A Assy	AWZ6626	Page 10
	NSP	2	ADR CONNECT B Assy	AWZ6627	
	NSP	3	ADR CONNECT C Assy	AWZ6628	
	NSP	4	ADR CONNECT D Assy	AWZ6629	
		5	BRIDGE A Assy	AWZ6620	
Add	NSP	1	ADR CONNECT A Assy	AWZ6626	Page 15
	NSP	2	ADR CONNECT B Assy	AWZ6627	
	NSP	3	ADR CONNECT C Assy	AWZ6628	
	NSP	4	ADR CONNECT D Assy	AWZ6629	
	NSP	12	SCAN (A) Assy	AWZ6616	
	NSP	13	SCAN (B) Assy	AWZ6617	
	NSP		SCAN FUKUGO ASSY	AWV1898	Page 24
	NSP		├─ SCAN (A) ASSY	AWZ6616	
	NSP		├─ SCAN (B) ASSY	AWZ6617	
	NSP		├─ X CONNECTOR (A) ASSY	AWZ6618	
	NSP		├─ X CONNECTOR (B) ASSY	AWZ6619	
Delete	~~NSP~~		├─ BRIDGE A ASSY	AWZ6620	
	~~NSP~~		├─ BRIDGE B ASSY	AWZ6621	
	~~NSP~~		├─ BRIDGE C ASSY	AWZ6622	
	~~NSP~~		├─ BRIDGE D ASSY	AWZ6623	
	~~NSP~~		├─ CLAMP A ASSY	AWZ6650	
	~~NSP~~		├─ CLAMP B ASSY	AWZ6651	
	~~NSP~~		├─ CLAMP C ASSY	AWZ6652	
	~~NSP~~		└─ CLAMP D ASSY	AWZ6653	
			ADDRESS FUKUGO ASSY	AWV1900	
	NSP		├─ ADR CONNECT A ASSY	AWZ6626	
	NSP		├─ ADR CONNECT B ASSY	AWZ6627	
	NSP		├─ ADR CONNECT C ASSY	AWZ6628	
	NSP		├─ ADR CONNECT D ASSY	AWZ6629	
Delete	~~NSP~~		└─ RESONANCE ASSY	AWZ6630	

PIONEER CORPORATION

Memo: SA71

K.MATSUMURA ,MANAGER
DP
Technical Support Group
Service Support Division

Please correct your service manual of following pages.

	Mark	No. Description	Part No.	PG.
	NSP	SCAN FUKUGO ASSY	AWV1898	Page 50
	NSP	├─ SCAN (A) ASSY	AWZ6617	
	NSP	├─ SCAN (B) ASSY	AWZ6616	
	NSP	├─ X CONNECTOR (A) ASSY	AWZ6618	
	NSP	├─ X CONNECTOR (B) ASSY	AWZ6619	
	~~NSP~~	├─ BRIDGE A ASSY	AWZ6620	
	~~NSP~~	├─ BRIDGE B ASSY	AWZ6621	
	~~NSP~~	├─ BRIDGE C ASSY	AWZ6622	
Delete	~~NSP~~	├─ BRIDGE D ASSY	AWZ6623	
	~~NSP~~	├─ CLAMP A ASSY	AWZ6650	
	~~NSP~~	├─ CLAMP B ASSY	AWZ6651	
	~~NSP~~	├─ CLAMP C ASSY	AWZ6652	
	~~NSP~~	└─ CLAMP D ASSY	AWZ6653	
		ADDRESS FUKUGO ASSY	AWV1900	
	NSP	├─ ADR CONNECT A ASSY	AWZ6626	
	NSP	├─ ADR CONNECT B ASSY	AWZ6627	
	NSP	├─ ADR CONNECT C ASSY	AWZ6628	
	NSP	├─ ADR CONNECT D ASSY	AWZ6629	
Delete	~~NSP~~	└─ RESONANCE ASSY	AWZ**6691** [OLD] ↓ AWZ**6630** [NEW]	

6.ADJUSTMENT

Page 67

6.1 SERVICE FACTORY MODE

<lower right figure>

[OLD]	[NEW]
*AXD1673	*AXD**1445**
(PDP-502HD)	(PDP-502HD)

6.2 ADJUSTMENT REQUIRED WHEN THE SET IS REPAIRED OR REPLACED

Page 101

[OLD]	[NEW]
Y DRIVE Assy	**Y DRIVE Assy**
*** When replaced**	*** When replaced**
1.SUSB ground timing adjustment	1.Panel white balance adjustment
2.Panel white balance adjustment	
X DRIVE Assy	**X DRIVE Assy**
*** When replaced**	*** When replaced**
1.SUSB ground timing adjustment	1.Panel white balance adjustment
2.Panel white balance adjustment	

Please correct your service manual of following pages.

PG.

[ADDITION]

SERVICE PANEL Assy Page 101

*** When you replace service Panel Assy**

Adjustment 1: SUS-B Ground Timing Adjustment

Adjustment 2: VSUS Adjustment

All of service panels have a panel identification label (Vsus data, Vofs data). Please just input this V-SUS data on the label to "V-SUS" on REF-DIG of service factory mode by remote control. (Please refer to the page 78 of S/M)

Adjustment 3: VOFS Adjustment

Please just input the V-OFS data on the label to "V-OFFSET" on REF-DIG of service factory mode. (Please refer to the page 78 of S/M)

Adjustment 4: Panel White Balance Adjustment

6.3.2 Main Unit Adjustment

VOFS/VH/IC5V Voltage Adjustment Page 104

[OLD]

Input Signal	Adjusting Point	Adjusting Method
White 100%	VR2703(VH) (Y DRIVE Assy)	**VH (voltage for scan IC) Adjustment** Adjust so that the voltage between K2716 (VH) and K2720 (PSUS) becomes **103V** ± 0.5V.

[NEW]

Input Signal	Adjusting Point	Adjusting Method
White 100%	VR2703(VH) (Y DRIVE Assy)	**VH (voltage for scan IC) Adjustment** Adjust so that the voltage between K2716 (VH) and K2720 (PSUS) becomes **130V** ± 0.5V.

White Balance Adjustment Page 106

[OLD]

Input Signal	Step	Adjusting Method
Video signal	1	Connect a Video card in RGB Assy through a jig cable, and set it in the state that RGB Assy can measure. (Refer to page **133** "Diagnosis of the Video Card (PDA-5002)".)

[NEW]

Input Signal	Step	Adjusting Method
Video signal	1	Connect a Video card in RGB Assy through a jig cable, and set it in the state that RGB Assy can measure. (Refer to page **141** "Diagnosis of the Video Card (PDA-5002)".)

Please correct your service manual of following pages.

PG.

6.4.3 GET Command

GPD (Get Power Down), PD (Power Down) : Outputs information Page 122

[OLD]

(Note) Do not perform the "FAY" in the PD state, and information acquisition is possible by perform the "GPD" directly.
However it is necessary to set ID beforehand.

[NEW]

(Note) Can not perform the "GPD" command in the PD state.

Diagnosis of the Video Card (PDA-5002) Page 141

[OLD]

3 Remove the SLOT CONNECTOR Assy from the RGB Assy and reconnect it with the Jig Cable (**GGD**1035).

[NEW]

3 Remove the SLOT CONNECTOR Assy from the RGB Assy and reconnect it with the Jig Cable (**GDD**1035).

* Please correct notes in a figure similarly. (You can find the same error.)

< Page ADDITION > Page 24

Caution in Replacement of Chassis Block (attached sheet)

Please add the attached sheet to your service manual (page 24).

Caution in Replacement of Chassis Block

Please order the PDP Service Assy 503 (AWU1040) when replacing the Chassis block.
PDP Service Assy 503 is all common use parts of for business, public use and module.
Supply it by the state that installed Circuit Board Spacer (AEC1872) and Wire Saddle (AEC1904) as follows.
Therefore need to remove it in accordance with model.

Confirm character carved a seal near the parts, and remove it.

P : Public exclusive use
W : Module exclusive use
PW : Common use of public use and module

* In case of this unit, the parts that "W" is marked removes all.

PDP Service Assy 503 (AWU1040)

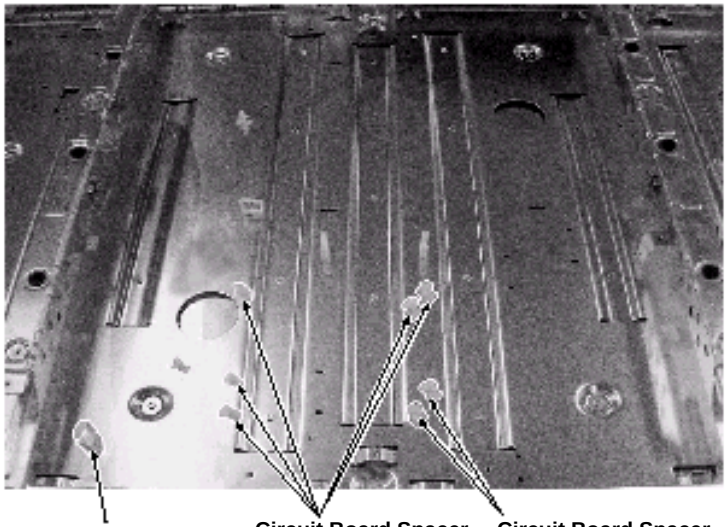

Pioneer

SERVICE INFORMATION

Date: Mar.11,2002 **No.:** **SI-D02019-G** **(1/2)**

MODEL No.	*****	**SER.No.**	**S/M No.**	**PG**
PDP-433PE/WYVI6	A	9363-	ARP3111	
PDP-433PU/KUC	A	9363-	ARP3111	

	#	**DETAIL**
SYMPTOM	1	Vibration noise (buzz noise) occurs from panel (especially from right (Y drive) side).
CAUSE	1	It is designed to make 0.5mm clearance between SCAN assy base and panel chassis assy base at a circled area on the following figure1. However by touching between these chassis because of uneven manufacturing of chassis, a vibration noise occurs from there.
SERVICE REMEDY	1	Insert antivibration spacer (AMR3312) into the hole on panel chassis assy.
FACTORY COUNTER -MEASURE	1	Same as the service remedy.

--- Please see the following page. ---

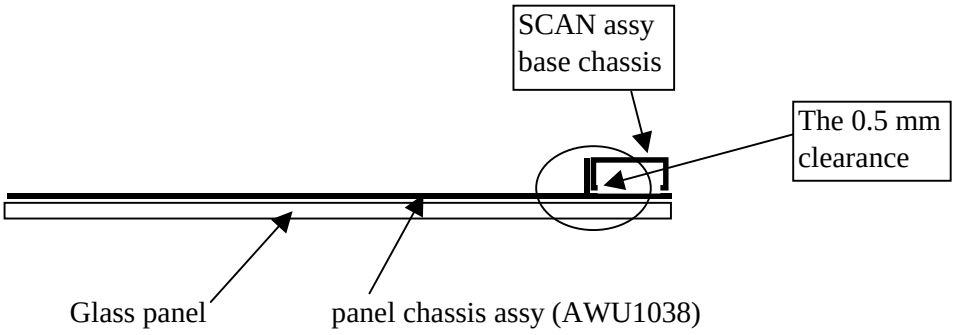

*** Fig 1**

Ref *	**#**	**CURRENT SYMBOL/DESCRIPTION**	**PARTS PART NUMBER**	**CO DE**	**NEW PART NUMBER**	**PARTS SYMBOL/DESCRIPTION**
A	1		Add		AMR3312	Antivibration spacer

PIONEER CORPORATION

K.MATSUMURA ,MANAGER
DP
Technical Support Group
Service Support Division

NOTE:PARTS CODE
1:Changeable from old to new.
2:Not Interchangeable an all.
3:Interchangeable in both ways
5:Do not use old parts

Memo: AA-D4254 SA71

Classify:

SERVICE REMEDY

1. Disassemble rear case.

2. Disassemble Y Drive assy.
   (Please refer page 87 of S/M ARP3111)

3. Insert antivibration spacer into the following hole on panel chassis assy.
   (However you can insert the spacers there by only disassembling Y DRIVE assy)

If it is hard to insert a spacer,
Please lift up this chassis a little
and then insert the spacers.

This is a inserting hole.
There are four holes on a panel chassis assy.

* Parts number of spacer : AMR3312

This picture is shown only upper area of panel.
Please perform this remedy to the lower area of panel, too.

Pioneer

SERVICE INFORMATION

Date: Aug.5, 2002 **No.:** **SI-D02019A-G** **(1/3)**

MODEL No.	*****	**SER.No.**	**S/M No.**	**PG**
PDP-433PE/WYVI6	A	9363-	ARP3111	
PDP-433PU/KUC	A	9363-	ARP3111	

	#	**DETAIL**
SYMPTOM	1	Vibration noise (buzz noise) occurs from panel (especially from right (Y drive) side).
CAUSE	1	It is designed to make 0.5mm clearance between SCAN assy base and panel chassis assy base at a circled area on figure1. However by touching between these chassis because of uneven manufacturing of chassis, a vibration noise occurs from there.
SERVICE REMEDY	1	Insert antivibration spacer (AMR3312) into the hole on panel chassis assy.
FACTORY COUNTER -MEASURE	1	Same as the service remedy.

NOTES:

1. Regarding the range of target units for this SI, please refer to the next page.
2. Regarding the service remedy, please refer to the last page.

Ref		**CURRENT**	**PARTS**	**CO**	**NEW**	**PARTS**
*****	**#**	**SYMBOL/DESCRIPTION**	**PART NUMBER**	**DE**	**PART NUMBER**	**SYMBOL/DESCRIPTION**
A	1		Add	-	AMR3312	Antivibration spacer

PIONEER CORPORATION

K.MATSUMURA ,MANAGER
DP
Technical Support Group
Service Support Division

NOTE:PARTS CODE
1:Changeable from old to new.
2:Not Interchangeable an all.
3:Interchangeable in both ways
5:Do not use old parts

Memo: AA-D4254 SY64

Classify:

How to find necessary panel chassis for SI-D02019A-G

Please confirm chassis serial number first and then decide whether this remedy (insert AMR3312) is necessary or not to a unit depending on the chassis serial number.

Moreover if the unit is not necessary to perform this remedy, but there are AMR3312s, please remove all of AMR3312s . If AMR3312s are inserted into a modified chassis, these parts may cause panel noise.

The location of chassis serial number is below;

<The location of panel chassis sticker>

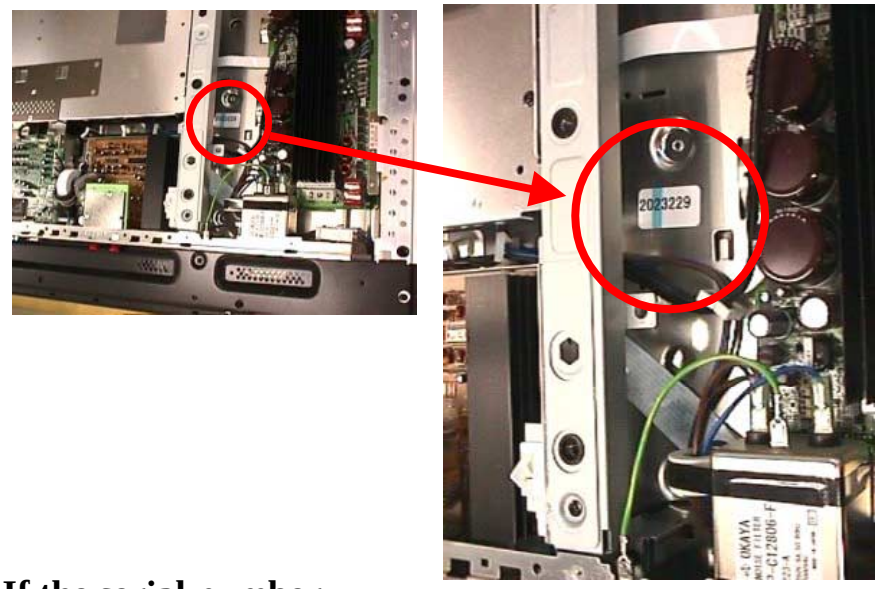

*** If the serial number in the red circle is;**

2031501 or under -> It is necessary to perform the remedy of SI-D2019A-G
(The panel chassis is not modified yet)

2031502 or over -> It is not necessary to perform the remedy of SI-D2019A-G
(The panel chassis is already modified in the factory)

Fig 1

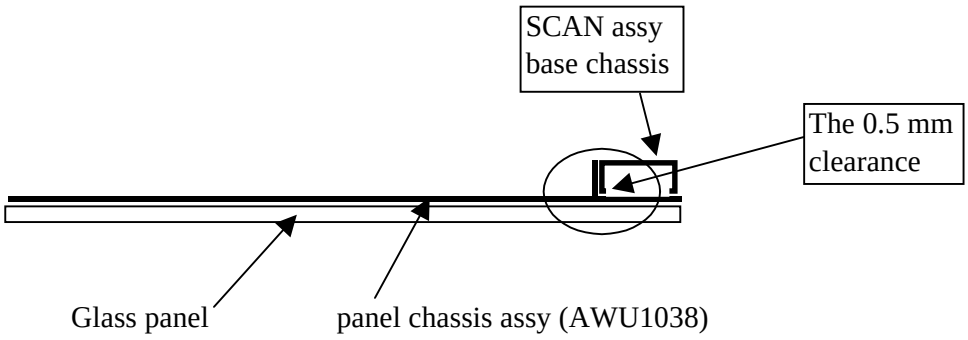

SERVICE REMEDY

1. Disassemble rear case.

2. Disassemble Y Drive assy.
   (Please refer page 87 of S/M ARP3111)

3. Insert antivibration spacer into the following hole on panel chassis assy.
   (However you can insert the spacers there by only disassembling Y DRIVE assy)

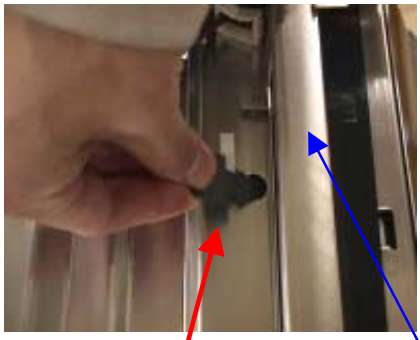

If it is hard to insert a spacer,
Please lift up this chassis a little
and then insert the spacers.

This is a inserting hole.
There are four holes on a panel chassis assy.

* Parts number of spacer : AMR3312

This picture is shown only upper area of panel.
Please perform this remedy to the lower area of panel, too.

Pioneer

SERVICE INFORMATION

Date: Mar.29,2002 **No.:** **SI-D02018** **(1/1)**

MODEL No.	*****	**SER.No.**	**S/M No.**	**PG**
SD-533HD5/KBXC	A		ARP3094	
SD-533HD5/KUXC/CA	A		ARP3094	
SD-643HD5/KUXC/CA	A		ARP3094	

	#	**CHANGE**
DETAIL	1	Change of parts in AWV1890 and AWV1910 of VIDEO IP A'SSY.

REASON	1	To prevent mis-operation when electricity is discharged.

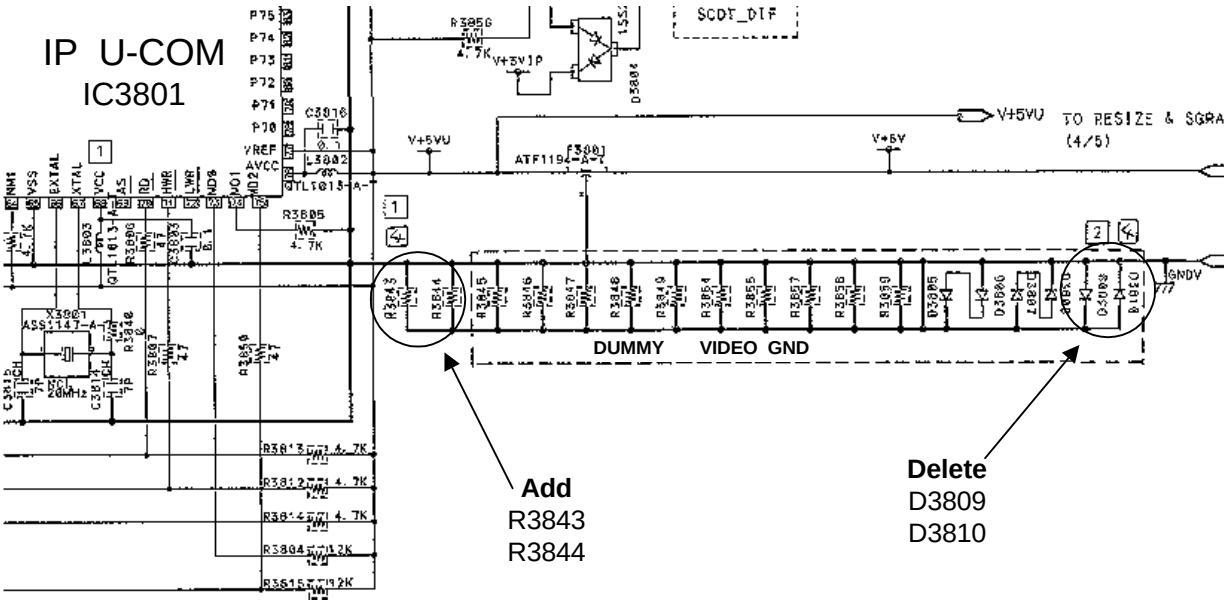

Ref		**CURRENT**	**PARTS**	**CO**	**NEW**	**PARTS**
*****	**#**	**SYMBOL/DESCRIPTION**	**PART NUMBER**	**DE**	**PART NUMBER**	**SYMBOL/DESCRIPTION**
A	1	D3809	1SS352-TRB		Deleted	
A	1	D3810	1SS352-TRB		Deleted	
A	1		Added		R3843	RS1/16SOROJ
A	1		Added		R3844	RS1/16SOROJ

PIONEER CORPORATION

K.MATUMURA ,MANAGER
DP
Technical Support Group
Service Support Division

NOTE:PARTS CODE
1;Changeable from old to new.
2:Not Interchangeable an all.
3:Interchangeable in both ways
5:Do not use old parts

Memo: SPC56-497 SA71
AA-D4150

Classify:

Pioneer

SERVICE INFORMATION

Date: Dec.25,2001 **No.:** **SI-D02017** **(1/1)**

MODEL No.	*****	**SER.No.**	**S/M No.**	**PG**
PDP-503CMX/LUCB	A		ARP3100	
PDP-503MXE/YVLDK	A		ARP3100	

	#	**CHANGE**
DETAIL	1	Change of parts in AWZ6644

REASON	1	Remedy for not emitting the pop sound when the input is switched or when the power supply is turned on and off.

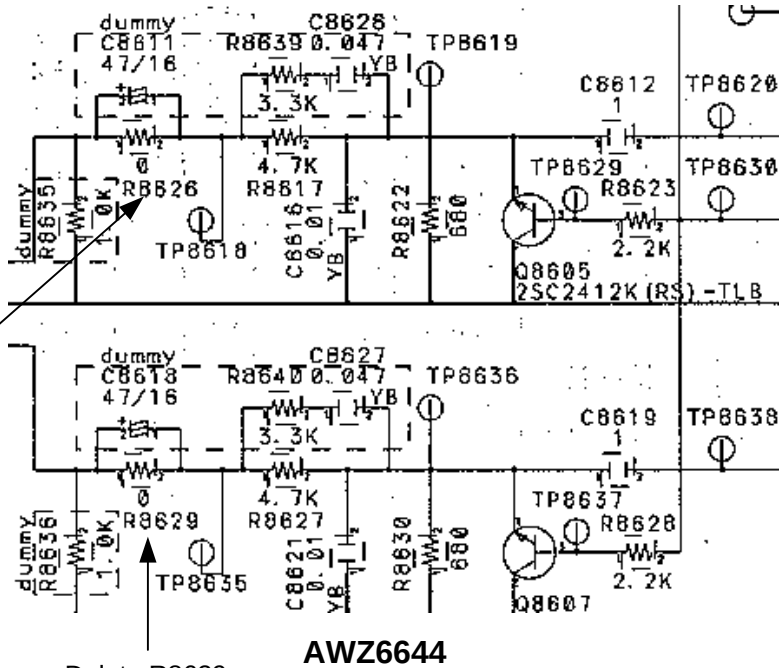

Delete R8626
and Add C8611

Delete R8629
and Add C8618

AWZ6644

Ref *	**#**	**CURRENT SYMBOL/DESCRIPTION**	**PARTS PART NUMBER**	**CO DE**	**NEW PART NUMBER**	**PARTS SYMBOL/DESCRIPTION**
A	1		Added		CEAT4R7M50	C8611
A	1		Added		CEAT4R7M50	C8618
A	1	R8626	RS1/16S0R0J		Deleted	
A	1	R8629	RS1/16S0R0J		Deleted	

PIONEER CORPORATION

K.MATUMURA ,MANAGER
DP
Technical Support Group
Service Support Division

NOTE:PARTS CODE
1;Changeable from old to new.
2:Not Interchangeable an all.
3:Interchangeable in both ways
5:Do not use old parts

Memo: SPC56-339
AA-D3919

Classify:

Pioneer

SERVICE INFORMATION

Date: Dec.28,2001 **No.:** **SI-D02015** **(1/1)**

MODEL No.	*****	**SER.No.**	**S/M No.**	**PG**
PDP-433PE/WYVIO6	A	100-	ARP3111	
PDP-433PU/KUC	A	001-	ARP3111	

	#	**CHANGE**
DETAIL	1	Addition of VR cushion to front chassis V.
REASON	1	The panel has resonated easily after a part of two sided tape of the panel was deleted by the service remedy. To lessen the vibration, the cushion is added.

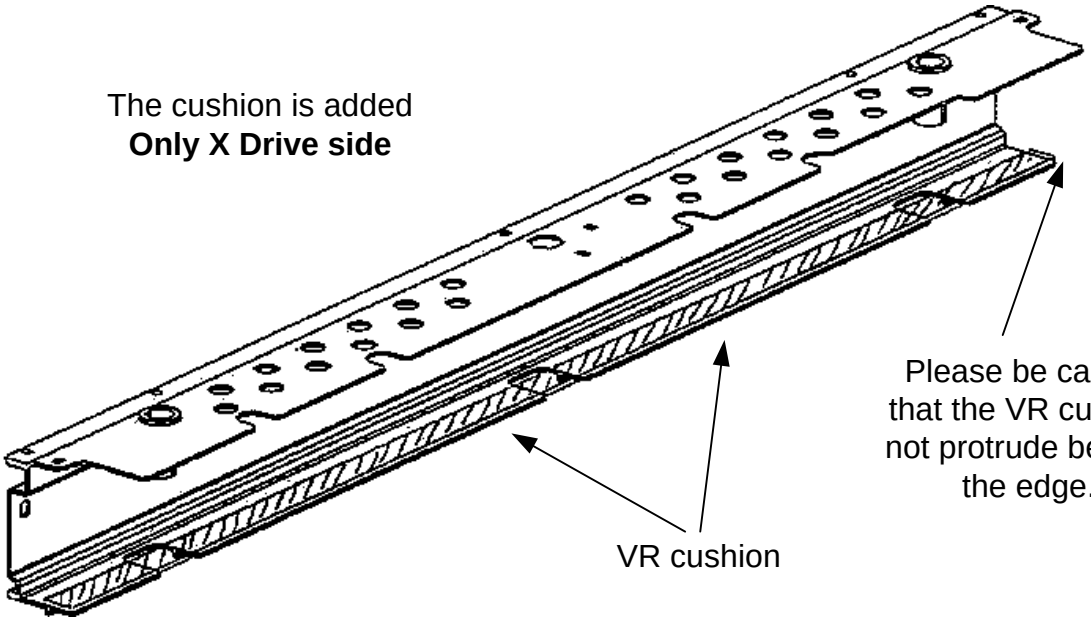

< FRONT CHASSIS V >

Ref *	**#**	**CURRENT SYMBOL/DESCRIPTION**	**PARTS PART NUMBER**	**CO DE**	**NEW PART NUMBER**	**PARTS SYMBOL/DESCRIPTION**
A	1		Added	-	AEB1374	Front chassis V

PIONEER CORPORATION

K.MATUMURA ,MANAGER
DP
Technical Support Group
Service Support Division

NOTE:PARTS CODE
1;Changeable from old to new.
2:Not Interchangeable an all.
3:Interchangeable in both ways
5:Do not use old parts

Memo: SPC56-347
AA-D4002

Classify:

Pioneer

SERVICE INFORMATION

Date: Jan.31, 2002 **No.:** **SI-D02014** **(1/1)**

MODEL No.	*****	**SER.No.**	**S/M No.**	**PG**
PDP-503CMX/LUCB	A		ARP3093	
PDP-503MXE/YVLDK	A		ARP3093	
PDP-503PE/WYVI6	A		ARP3093	
PDP-503PG/TLDPKB6	A		ARP3093	
PRO-1000HD	A		ARP3093	
PDP-503PU/KUC	A		ARP3093	
PDU-50WX2/TUCYV	A		ARP3093	
PDP-433PE/WYVI6	A		ARP3093	
PDP-433PU/KUC	A		ARP3093	

	#	**CHANGE**
DETAIL	1	Change of resistor in AWV1903 and AWV1929.
REASON	1	Corrective action for PD by insufficiency of reset when the power turns on..

In AWV1903, it applies from serial# 4534.
In AWV1929, it applies to all.

Ref		**CURRENT**	**PARTS**	**CO**	**NEW**	**PARTS**
*****	**#**	**SYMBOL/DESCRIPTION**	**PART NUMBER**	**DE**	**PART NUMBER**	**SYMBOL/DESCRIPTION**
A	1	R1128	RS1/16S472J		RD1/4PU473J	R1128

PIONEER CORPORATION

M.EGASHIRA ,MANAGER
BS
Service Engineering Section
Service Division

NOTE:PARTS CODE
1;Changeable from old to new.
2:Not Interchangeable an all.
3:Interchangeable in both ways
5:Do not use old parts

Memo: AA-D3888
SPC56-310

Classify: YY-70

Pioneer

SERVICE INFORMATION

Date: Jan.31, 2002 **No.:** **SI-D02012** **(1/2)**

MODEL No.	*****	**SER.No.**	**S/M No.**	**PG**
PDP-503CMX/LUCB	A	005536-	ARP3093	
PDP-503MXE/YVLDK	A	004871-	ARP3093	
PDP-503PE/WYVI6	B	002291-	ARP3093	
PDP-503PG/TLDPKB6	B	ALL	ARP3093	
PDP-503PU/KUC	B	ALL	ARP3093	
PDP-433PE/WYVI6	C	ALL	ARP3093	
PDP-433PU/KUC	C	ALL	ARP3093	
PDU-M5001/WX1K	B	ALL	ARP3093	
PDU-50WX2/TUCYV	D	000071-	ARP3093	

	#	**CHANGE**
DETAIL	1	Change of parts and deletion of ASSY.
REASON	1	Production convenience

* V MID CLAMP ASSY (AWV1934) is moved on the aluminum base chassis of power supply module.

* AXY1055 and AXY1056 can be used instead of AXY1053.
(However, this opposite pattern is impossible.)
In this case, V MID CLAMP ASSY on AXY1056 is not used.

Ref *	**#**	**CURRENT SYMBOL/DESCRIPTION**	**PARTS PART NUMBER**	**CO DE**	**NEW PART NUMBER**	**PARTS SYMBOL/DESCRIPTION**

Refer to the following page.

PIONEER CORPORATION

M.EGASHIRA ,MANAGER
BS
Service Engineering Section
Service Division

NOTE:PARTS CODE
1;Changeable from old to new.
2:Not Interchangeable an all.
3:Interchangeable in both ways
5:Do not use old parts

Memo: AA-D3798
SPC56-298

Classify: YY-70

Ref *	#	CURRENT PARTS SYMBOL / DESCRIPTION	PART NUMBER	CODE	PART NUMBER	NEW PARTS SYMBOL / DESCRIPTION
AB	1		AXY1053		AXY1055	
C	1		AXY1053		AXY1056	
ABC	1	V MID CLAMP ASSY	AWV1934		deleted	
A	1	J0118	ADX2754		deleted	
A	1	J0119	ADX2755		deleted	
B	1	J0120	ADX2752		deleted	
B	1	J0121	ADX2759		deleted	
C	1	J0120	ADX2749		deleted	
C	1	J0121	ADX2750		deleted	
A	1		added		ADX2761	J0118
B	1		added		ADX2761	J0120
C	1		added		ADX2763	J0120
D	1	J0120	ADX2760		ADX2761	J0120

Pioneer

SERVICE INFORMATION

Date: Feb.1, 2002 **No.:** **SI-D02009** **(1/1)**

MODEL No.	*****	**SER.No.**	**S/M No.**	**PG**
PDP-503CMX/LUCB	A	Running Change	ARP3093	
PDP-503MXE/YVLDK	A	Running Change	ARP3093	
PDP-503PE/WYVI6	A	Running Change	ARP3093	
PDP-503PG/TLDPKB6	A	Running Change	ARP3093	
PRO-1000HD	A	Running Change	ARP3093	
PDP-503PU/KUC	A	Running Change	ARP3093	
PDU-50WX2/TUCYV	A	Running Change	ARP3093	

	#	**CHANGE**
DETAIL	1	Add the V cushion to the panel side of front chassis V.
REASON	1	To prevent the interaction between panel and front chassis V.

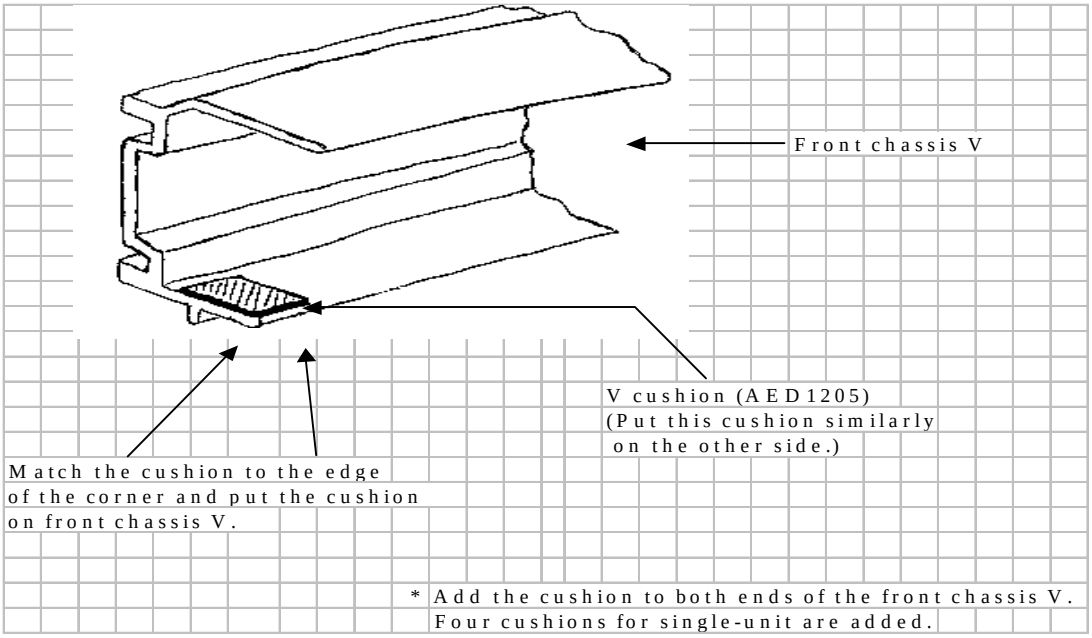

Ref *	**#**	**CURRENT SYMBOL/DESCRIPTION**	**PARTS PART NUMBER**	**CODE**	**NEW PART NUMBER**	**PARTS SYMBOL/DESCRIPTION**
A	1		Added	-	AED1205	3429

PIONEER CORPORATION

M.EGASHIRA ,MANAGER
BS
Service Engineering Section
Service Division

NOTE:PARTS CODE
1;Changeable from old to new.
2:Not Interchangeable an all.
3:Interchangeable in both ways
5:Do not use old parts

Memo: SPC56-286
AA-D3793

Classify: YY-70

Pioneer

SERVICE INFORMATION

Date: Mar.5,2002 **No.:** **SI-D02008A** **(1/1)**

MODEL No.	*****	**SER.No.**	**S/M No.**	**PG**
PDP-503PE/WYVI06	A	000051-	ARP3093	
PDP-503PG/TLDPKB6	A	ALL	ARP3093	
PDP-503PU/KUC	A	ALL	ARP3093	
PDU-M5001/WX1K	A	ALL	ARP3093	
PDP-433PE/WYVI06	A	ALL	ARP3093	
PDP-433PU/KUC	A	ALL	ARP3093	
PDP-503CMX/LUCB	A	002051-	ARP3093	
PDP-503MXE/YVLDK	A	000151-	ARP3093	

	#	**CHANGE**
DETAIL	1	Add the sheet for preventing resonance to front case.
	2	Delete the spacer B according to changing the type of front case.
	3	In order to reduce the resonance of the operation relay board and corner metal fittings, add cushions on corner metal fittings.

REASON To prevent resonance vibration from FRONT KEY CONNECTOR Assy when outputting sound from side speaker.

--- Please discard the previous Service Information, SI-D02008 dated on Jan.25,2002. ---

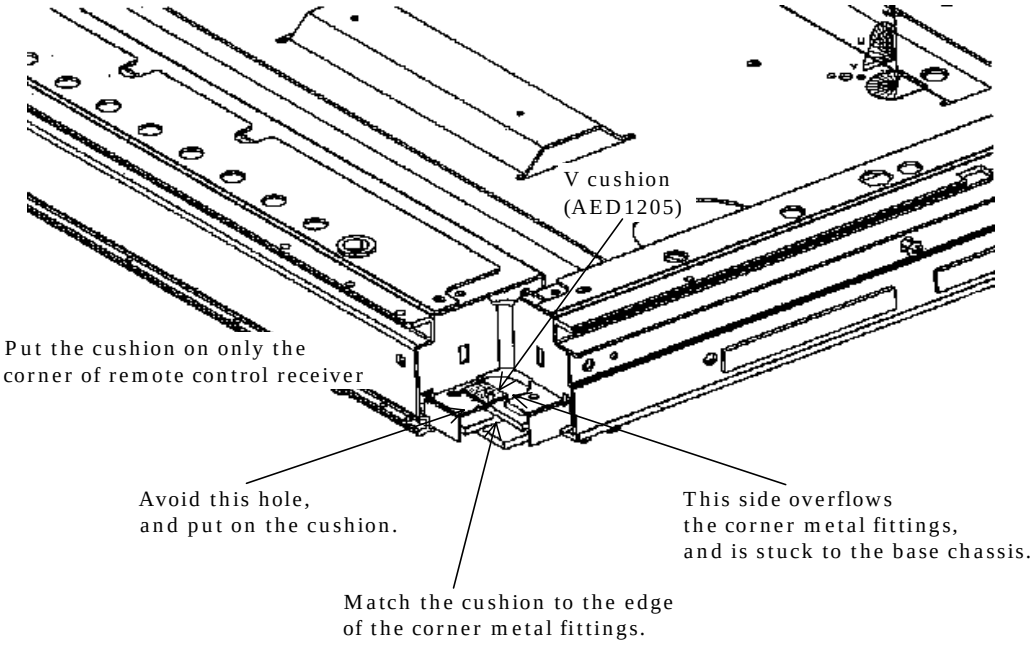

Ref		**CURRENT**	**PARTS**	**CO**	**NEW**	**PARTS**
*****	**#**	**SYMBOL/DESCRIPTION**	**PART NUMBER**	**DE**	**PART NUMBER**	**SYMBOL/DESCRIPTION**
A	1	4103	AMB2697		AMB2722	4103
A	2	3298	AMR3300		Deleted	
A	3		Added		AED1205	3430

PIONEER CORPORATION

K.MATSUMURA ,MANAGER
DP
Technical Support Group
Service Support Division

NOTE:PARTS CODE
1;Changeable from old to new.
2:Not Interchangeable an all.
3:Interchangeable in both ways
5:Do not use old parts

Memo: SPC56-285
AA-D3735

Classify: SA-71

Pioneer

SERVICE INFORMATION

Date: Jun.26, 2002 **No.:** **SI-D02007-G** **(1/1)**

MODEL No.	*	**SER.No.**	**S/M No.**	**PG**
PDP-503CMX/LUCB		ALL	ARP3093	
PDP-503MXE/YVLDK		ALL		

	#	**DETAIL**
SYMPTOM	1	When you control several units by setting the ID number in the integrator mode, the units connected with other units cannot be controlled unless you turn off the power to reset Micro Computer. You do not need to turn off the power when you set the ID number by 232C.
CAUSE	1	Due to the software specifications, even if the ID number is set in the integrator mode, the control output of the unit is being prohibited because ID is not effective unless Micro Computer is reset. Therefore, the symptom occurs because the control signal does not go to the unit connected next.
SERVICE REMEDY	1	Please do the following remedy when the symptom occurs.
FACTORY COUNTER -MEASURE		

<REMEDY>

* When you set the ID number in the integrator mode, please pull out the power plug once, or power off the main switch of the rear panel and then power on the unit again one minute later.

  (The microcomputer is not reset in short time because stand-by mode keeps 30 seconds.)

* It is possible to usually control by RS-232C afterwards,
  if the ID is set in the integrator mode and this remedy is done first.

Ref		**CURRENT**	**PARTS**	**CO**	**NEW**	**PARTS**
*****	**#**	**SYMBOL/DESCRIPTION**	**PART NUMBER**	**DE**	**PART NUMBER**	**SYMBOL/DESCRIPTION**

PIONEER SERVICE NETWORK CORPORATION

M.EGASHIRA ,MANAGER

BS Service Administration Group
BS Service Division

NOTE:PARTS CODE
1:Changeable from old to new.
2:Not Interchangeable an all.
3:Interchangeable in both ways
5:Do not use old parts

Memo: B06062

Classify: YY-70

Pioneer

SERVICE INFORMATION

Date: Sep. 21, 2001 **No.:** **SI-D02005** **(1/1)**

MODEL No.	*****	**SER.No.**	**S/M No.**	**PG**
SD-533HD5/KBXC	A	R/C	ARP3094	
SD-533HD5/KUXC/CA	A	R/C	ARP3094	
SD-643HD5/KUXC/CA	A	R/C	ARP3094	

	#	**CHANGE**
DETAIL	1	Addtion of a resistor in DEFLECTION SERVICE Assy (AWV1888, AWV1909)
REASON	1	To prevent IC502 being destroyed when electricity is discharged.

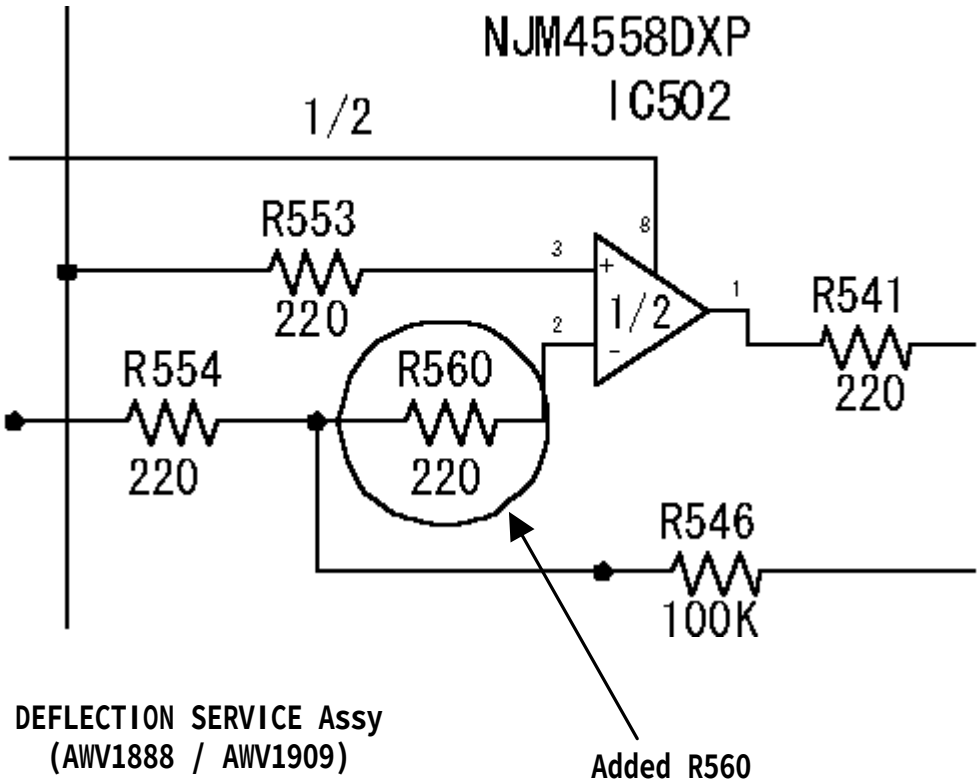

Ref *	**#**	**CURRENT SYMBOL/DESCRIPTION**	**PARTS PART NUMBER**	**CO DE**	**NEW PART NUMBER**	**PARTS SYMBOL/DESCRIPTION**
A	1		Added	-	RD1/4PU221J	R560

PIONEER CORPORATION

K.NOHARA ,MANAGER
HE

Service Engineering Section
Service Division

NOTE:PARTS CODE
1;Changeable from old to new.
2:Not Interchangeable an all.
3:Interchangeable in both ways
5:Do not use old parts

Memo: SPC56-262 AN 9

Classify:

Pioneer

SERVICE INFORMATION

Date: Sep. 17, 2001 **No.:** **SI-D02004** **(1/1)**

MODEL No.	*****	**SER.No.**	**S/M No.**	**PG**
PRO-520HD/KUXC/CA	A	R/C		
PRO-620HD/KUXC/CA	A	R/C		
PRO-720HD/KUXC/CA	A	R/C		

	#	**CHANGE**
DETAIL	1	Change of resistors in SIGNAL Assy
REASON	1	Improve dynamic range of Y signal.

Ref		**CURRENT**	**PARTS**	**CO**	**NEW**	**PARTS**
*****	**#**	**SYMBOL/DESCRIPTION**	**PART NUMBER**	**DE**	**PART NUMBER**	**SYMBOL/DESCRIPTION**
A	1	R6317	RS1/16S123J	2	RS1/16S113J	R6317
A	1	R6323	RS1/16S123J	2	RS1/16S113J	R6323

PIONEER CORPORATION

K.NOHARA ,MANAGER
HE
Service Engineering Section
Service Division

NOTE:PARTS CODE
1;Changeable from old to new.
2:Not Interchangeable an all.
3:Interchangeable in both ways
5:Do not use old parts

Memo: AN 9

Classify:

Pioneer

SERVICE INFORMATION

Date: Sep.17, 2001 **No.:** **SI-D02003** **(1/1)**

MODEL No.	*****	**SER.No.**	**S/M No.**	**PG**
SD-533HD5/KBXC	A	R/C	ARP3094	
SD-533HD/KUXC/CA	A	R/C	ARP3094	
SD-643HD5//KUXC/CA	A	R/C	ARP3094	

	#	**CHANGE**
DETAIL	1	Parts change on deflection Assy
REASON	1	Improvement of work efficiency 8with X-ray adjustment. Due to large data with H-size after adjustment (H-size adjustment data becomes far from center)

Ref		**CURRENT**	**PARTS**	**CO**	**NEW**	**PARTS**
*****	**#**	**SYMBOL/DESCRIPTION**	**PART NUMBER**	**DE**	**PART NUMBER**	**SYMBOL/DESCRIPTION**
A	1	R612	RN1/4PC1801F	2	RN1/4PC1802F	R612
A	1	R624	RN1/4PC1002F	2	RN1/4PC1802F	R624
A	1	VR602	VRTHS6VS473	2	VRTHS6VS223	VR602
A	1	R515	RD1/4PU332J	2	RD1/4PU272J	R515

PIONEER CORPORATION

K.NOHARA ,MANAGER
HE
Service Engineering Section
Service Division

NOTE:PARTS CODE
1;Changeable from old to new.
2:Not Interchangeable an all.
3:Interchangeable in both ways
5:Do not use old parts

Memo: SPC56-240 AN 9
AA-D3637

Classify:

Pioneer

SERVICE INFORMATION

Date: Sep.17, 2001 **No.:** **SI-D02002** **(1/1)**

MODEL No.	*****	**SER.No.**	**S/M No.**	**PG**
SD-533HD5/KBXC	A	R/C	ARP3094	
SD-533HD5/KUXC/CA	A	R/C	ARP3094	
SD-643HD5/KUXC/CA	A	R/C	ARP3094	

	#	**CHANGE**
DETAIL	1	Addition of capacitors in DIGITAL CONV. Assy (AWV1892)

REASON	1	Countermeasure for broken convergence data problem.

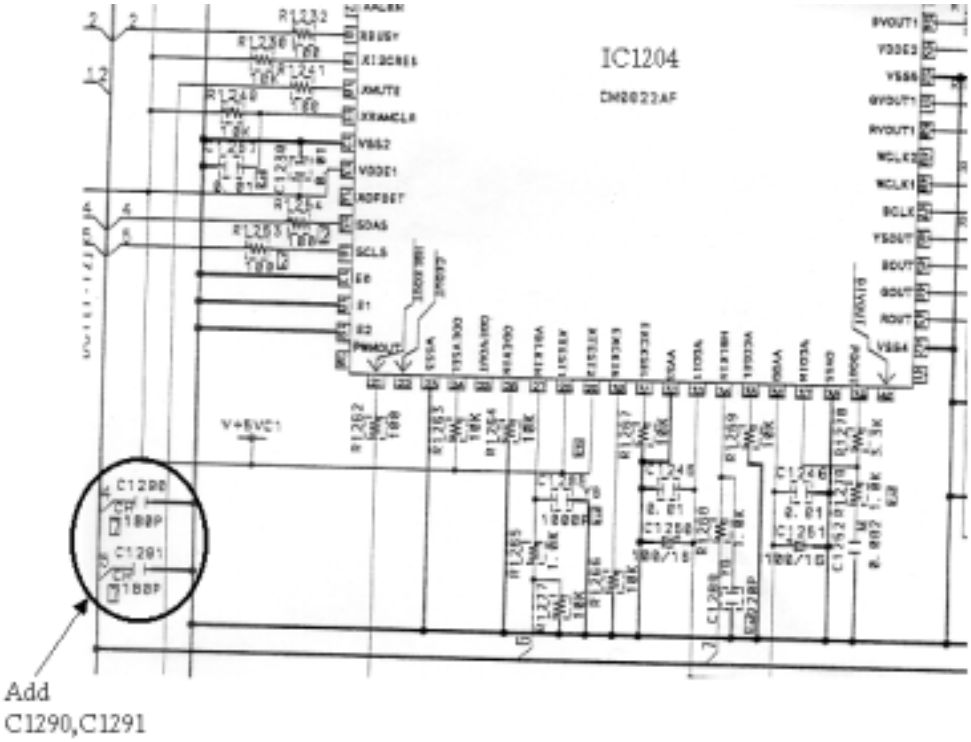

Ref *	**#**	**CURRENT SYMBOL/DESCRIPTION**	**PARTS PART NUMBER**	**CO DE**	**NEW PART NUMBER**	**PARTS SYMBOL/DESCRIPTION**
A	1		Added	-	CCCCH181J50	C1290
A	1		Added	-	CCCCH181J50	C1291

PIONEER CORPORATION

K.NOHARA ,MANAGER
HE
Service Engineering Section
Service Division

NOTE:PARTS CODE
1;Changeable from old to new.
2:Not Interchangeable an all.
3:Interchangeable in both ways
5:Do not use old parts

Memo: SPC56-235 AN 9
AA-D3748

Classify:

Pioneer

SERVICE INFORMATION

Date: Jul.9,2001 **No.:** **SI-D02001-G** **(1/1)**

MODEL No.	*****	**SER.No.**	**S/M No.**	**PG**
RMD-V3109/LU/CA	A	ALL		
RMD-V3216/LU/CA	A	ALL		
RMD-V3000X/LU/CA	A	ALL		
RMD-V3104/L/LUW	A	ALL		
RM-V1000/KU/CA	A	ALL		

	#	**DETAIL**
SYMPTOM	1	Screen sometimes does not accept a command and freezes.
CAUSE	1	Multi video processor can not accept a command.
SERVICE REMEDY	1	Please leave an interval between "!" command and the next command.
	2	Please set Trunk piece mitigation mode OFF.

FACTORY COUNTER -MEASURE

Please set "!" command and Trunk piece mitigation mode as follows;
If the operation is normal, you do not have to take the following measures.

1) After "!" command, please send the next command at 100 millisecond intervals.

2) Please set Trunk piece mitigation mode between 0 and 7 on the rear panel of Multi video processor.

Ref *	**#**	**CURRENT SYMBOL/DESCRIPTION**	**PARTS PART NUMBER**	**CO DE**	**NEW PART NUMBER**	**PARTS SYMBOL/DESCRIPTION**

PIONEER SERVICE NETWORK CORPORATION

M.EGASHIRA ,MANAGER

BS Service Administration Group
BS Service Division

NOTE:PARTS CODE
1:Changeable from old to new.
2:Not Interchangeable an all.
3:Interchangeable in both ways
5:Do not use old parts

Memo: MCA051

Classify: NM-70

Pioneer

SERVICE INFORMATION

Date: Jun.5,2001 **No.:** **SI-D01041-G** **(1/1)**

MODEL No.	*****	**SER.No.**	**S/M No.**	**PG**
PDP-502MX/LUCBW	A	Running Change	ARP3075	
PDP-502MXE/YVLDK	A	Running Change	ARP3075	

	#	**DETAIL**
SYMPTOM	1	Buzzing noise coming from plasma panel
CAUSE	1	The front protection panel made of acrylic fiber was warped by the effect of heat and humidity.
	2	The molding process of front protection panel which is used for PDP-502MX(E)/1 is different to PDP-502MX(E).
SERVICE REMEDY	1	Design change Change the front protection panel AMR3228 (PDP-502MX(E)/1) to AMR3163 (PDP-502MX(E)) which is made of acrylic fiber.
FACTORY COUNTER -MEASURE	1	Same as Service Remedy

Ref		**CURRENT**	**PARTS**	**CO**	**NEW**	**PARTS**
*****	**#**	**SYMBOL/DESCRIPTION**	**PART NUMBER**	**DE**	**PART NUMBER**	**SYMBOL/DESCRIPTION**
A	1	Front Protection Panel	AMR3228	1	AMR3163	Front Protection Panel

PIONEER SERVICE NETWORK CORPORATION

M.EGASHIRA ,MANAGER

BS Service Administration Group
BS Service Division

NOTE:PARTS CODE
1:Changeable from old to new.
2:Not Interchangeable an all.
3:Interchangeable in both ways
5:Do not use old parts

Memo: MCA01-AA-D3173 030

Classify: NM-70

Pioneer

SERVICE INFORMATION

Date: Mar.7,2001 **No.:** **SI-D01040** **(1/1)**

MODEL No.	*	SER.No.	S/M No.	PG
PRO-510HD/KUXC/CA	A	R/C	ARP3047	
PRO-610HD/KUXC/CA	A	R/C	ARP3047	
PRO-710HD/KUXC/CA	A	R/C		
SD-532HD5/KUXC/CA	A	R/C	ARP3047	
SD-582HD5/KUXC/CA	A	R/C	ARP3047	
SD-532HD5/KBXC	A	R/C	ARP3047	

	#	CHANGE
DETAIL	1	Change of resistor in VIDEO Assy.
REASON	1	Production convenience.

Ref *	#	CURRENT SYMBOL/DESCRIPTION	PARTS PART NUMBER	CODE	NEW PART NUMBER	PARTS SYMBOL/DESCRIPTION
A	1	R5296	RN1/4PC3301F	2	RN1/4PC3601F	R5296
A	1	R5345	RN1/4PC1502F	2	RN1/4PC1602F	R5345

PIONEER CORPORATION

Y.YAMAMOTO ,MANAGER
HE

Service Engineering Section
Service Division

NOTE:PARTS CODE
1;Changeable from old to new.
2:Not Interchangeable an all.
3:Interchangeable in both ways
5:Do not use old parts

Memo: AA-D3045 KT,9
SPC55-425

Classify:

Pioneer

SERVICE INFORMATION

Date: Mar.5,2001 **No.:** **SI-D01039** **(1/1)**

MODEL No.	*	**SER.No.**	**S/M No.**	**PG**
PDP-S03-LR/WL	A	R/C	RRV2168	
PDP-S04-LR/WL	A	R/C	RRV2169	

	#	**CHANGE**
DETAIL	1	Add the packing

REASON	1	To prevent the air from leaking

<added position>

up and down of the cabinet

<size of the packing >

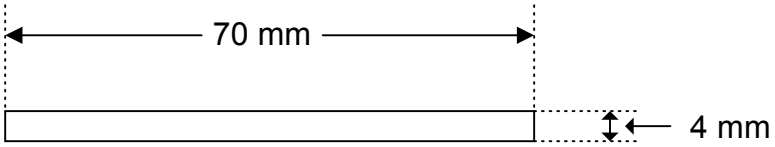

Ref *	#	**CURRENT SYMBOL/DESCRIPTION**	**PARTS PART NUMBER**	**CO DE**	**NEW PART NUMBER**	**PARTS SYMBOL/DESCRIPTION**
			Added	-	SEC1538	PACKING

PIONEER CORPORATION

Y.YAMAMOTO ,MANAGER
HE

Service Engineering Section
Service Division

NOTE:PARTS CODE
1;Changeable from old to new.
2:Not Interchangeable an all.
3:Interchangeable in both ways
5:Do not use old parts

Memo: TK-05016 KT, 9
SPC55-415

Classify:

Pioneer

SERVICE INFORMATION

Date: May.29, 2001 **No.:** **SI-D01038-G** **(1/2)**

MODEL No.	*	SER.No.	S/M No.	PG
PDP-502MX/LUCBW	A		ARP3037	
PDP-502MX/LUCBW/1	A		ARP3043	
PDP-502MXE/YVLDK	A		ARP3075	
PDP-502MXE/YVLDK/1	A		ARP3080	
PDP-505HD/KUC	A			
PDP-505HD/KUC/1	A			

	#	DETAIL
SYMPTOM	1	Picture sometimes become magenta or green color. Picture doesn't appear in a moment. Picture becomes monochrome or white in a monent.
CAUSE	1	The signal processing circuit malfunctions because the noise obstruct the communication line in U-COM.
SERVICE REMEDY	1	1) Add the capacitor to the communication line in Analog Video Ass'y. 2) Add the ferrite core to the cable which is between the Analog Video Ass'y and the u-com Ass'y. (Please use the ferrite core which is used in the product.)
FACTORY COUNTER -MEASURE		Same as the Service Remedy

------- Please refer to the following page. -------

Ref *	#	CURRENT SYMBOL/DESCRIPTION	PARTS PART NUMBER	CO DE	NEW PART NUMBER	PARTS SYMBOL/DESCRIPTION
A	1		Added		CCCCH271J50	C2305, C2306

PIONEER CORPORATION

Y.YAMAMOTO ,MANAGER
HE
Service Engineering Section
Service Division

NOTE:PARTS CODE
1;Changeable from old to new.
2:Not Interchangeable an all.
3:Interchangeable in both ways
5:Do not use old parts

Memo: SPC55-405 AN 69
AA-D3049

Classify:

ANALOG VIDEO Assy for PDP-502MX/LUCBW, PDP-502MXE/YVLDK and 505HD/KUC

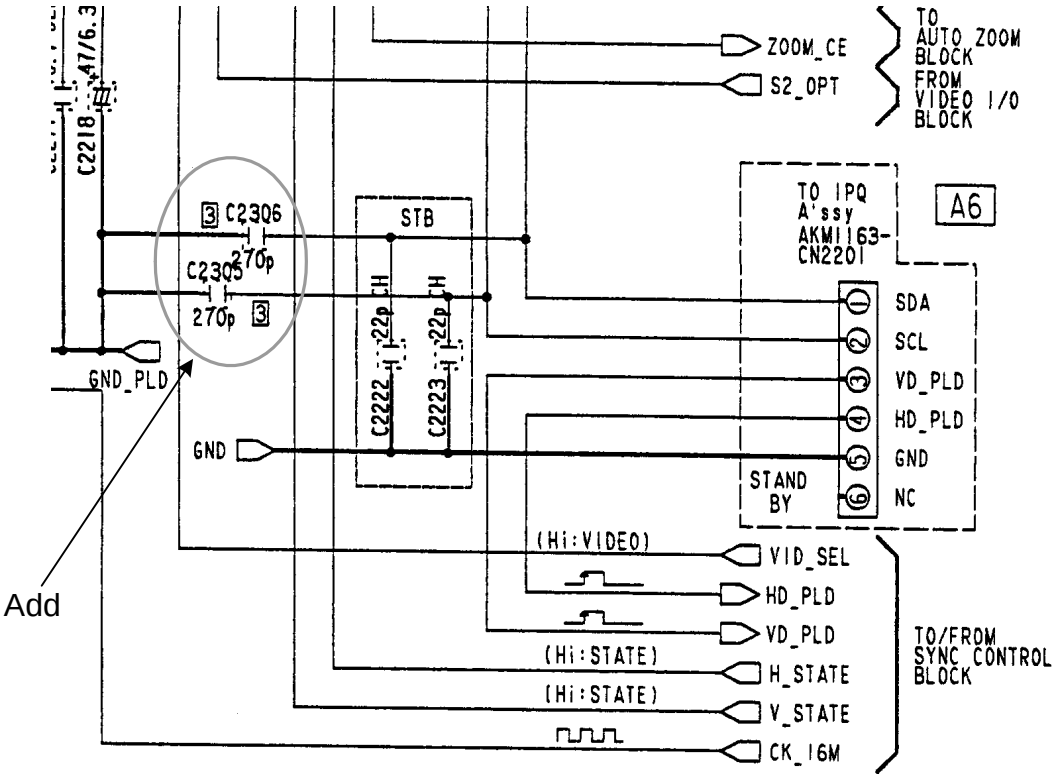

ANALOG VIDEO Assy for PDP-502MX/LUCBW/1, PDP-502MXE/YVLDK/1 and 505HD/KUC/1

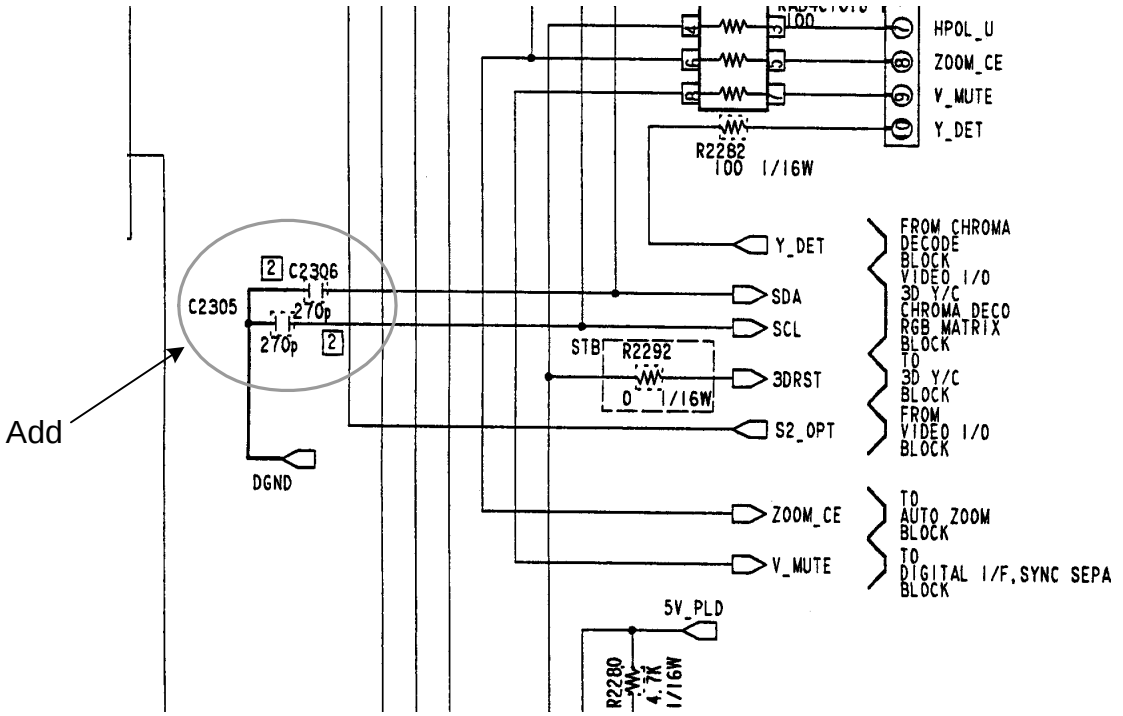

Pioneer

SERVICE INFORMATION

Date: Feb.26,2001 **No.:** **SI-D01037** **(1/1)**

MODEL No.	*	**SER.No.**	**S/M No.**	**PG**
PDU-50WX1/TUCYV	A	ALL	ARP3072	
LC-PD50U (for SHARP)	A	ALL		

	#	**CHANGE**
DETAIL	1	Add the flat ferrite core (L0001-L0010)

REASON	1	To improve the fault of address module

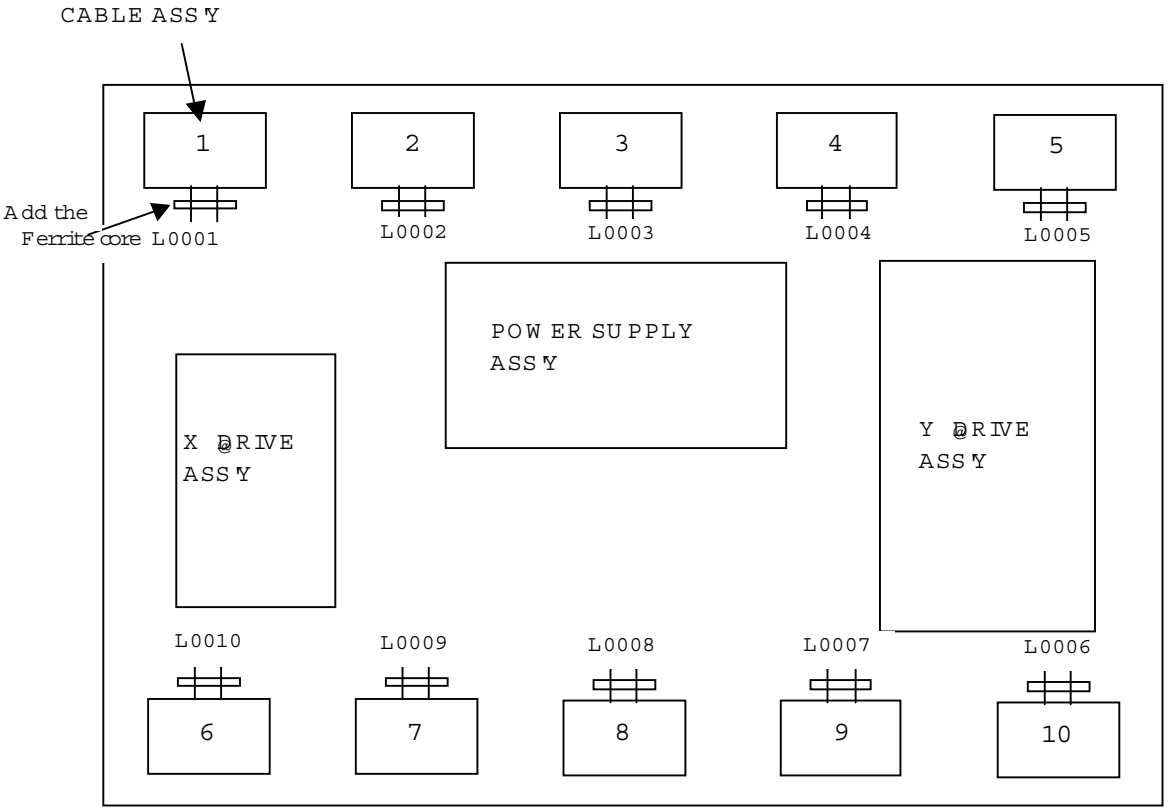

Ref *	#	**CURRENT SYMBOL/DESCRIPTION**	**PARTS PART NUMBER**	**CODE**	**NEW PART NUMBER**	**PARTS SYMBOL/DESCRIPTION**
A	1		Added	-	ATX1041	L0001-L0010

PIONEER CORPORATION

Y.YAMAMOTO ,MANAGER
HE

Service Engineering Section
Service Division

NOTE:PARTS CODE
1;Changeable from old to new.
2:Not Interchangeable an all.
3:Interchangeable in both ways
5:Do not use old parts

Memo: SPC55-398 KT, 70
AA-D3054

Classify:

Pioneer

SERVICE INFORMATION

Date: Feb.22, 2001 **No.:** **SI-D01036** **(1/1)**

MODEL No.	*****	**SER.No.**	**S/M No.**	**PG**
PRO-510HD/KUXC/CA	A	R/C	ARP3047	72
PRO-610HD/KUXC/CA	A	R/C	ARP3047	72
PRO-710HD/KUXC/CA	A	R/C		
SD-532HD5/KUXC/CA	A	R/C	ARP3047	72
SD-582HD5/KUXC/CA	A	R/C	ARP3047	72
SD-532HD5/KBXC	A	R/C	ARP3047	72

	#	**CHANGE**
DETAIL	1	Deletion of capacitor in SUB VIDEO SERVICE Assy
REASON	1	To prevent the picture mute the picture mute during VCR high speed search.

S/M : P.72 SUB VIDEO SERVICE Assy loc. C-3

Ref		**CURRENT**	**PARTS**	**CO**	**NEW**	**PARTS**
*****	**#**	**SYMBOL/DESCRIPTION**	**PART NUMBER**	**DE**	**PART NUMBER**	**SYMBOL/DESCRIPTION**
A	1	C4101	CEV100M16	-	Deleted	

PIONEER CORPORATION

Y.YAMAMOTO ,MANAGER
HE
Service Engineering Section
Service Division

NOTE:PARTS CODE
1;Changeable from old to new.
2:Not Interchangeable an all.
3:Interchangeable in both ways
5:Do not use old parts

Memo: SPC55-412 AN 9

Classify:

Pioneer

SERVICE INFORMATION

Date: Feb.26 2001 **No.:** **SI-D01035** **(1/1)**

MODEL No.	*	**SER.No.**	**S/M No.**	**PG**
PDP-502MX/LUCBW/1	A		ARP3035	
PDP-502MXE/YVLDK/1	A		ARP3080	
PDP-505HD/KUC/1	A			

	#	**CHANGE**
DETAIL	1	Deletion of resistors (R3705,R3734) and addition of resistors (R3741,R3742) in Y Drive Assy (AWV1847, AWV1863).
REASON	1	To prevent open CP line resistor.

Y DRIVE Assy

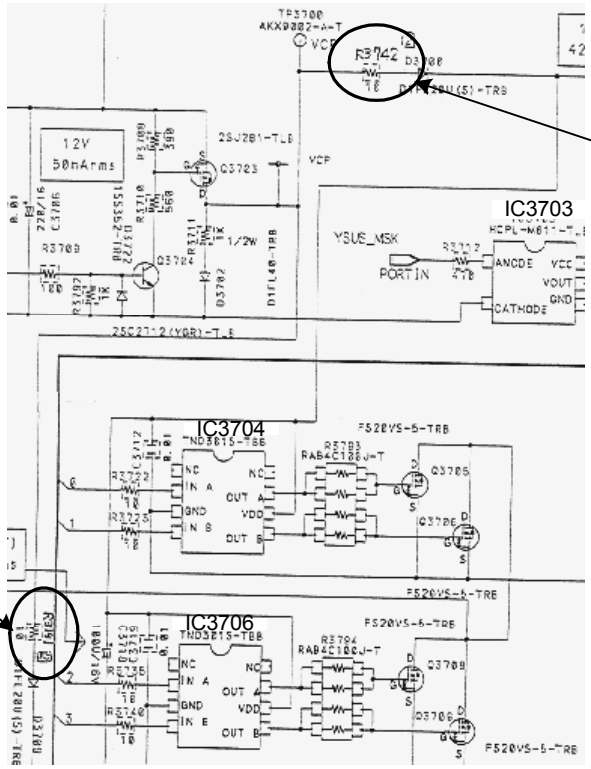

A

Ref		**CURRENT**	**PARTS**	**CO**	**NEW**	**PARTS**
*	#	**SYMBOL/DESCRIPTION**	**PART NUMBER**	**DE**	**PART NUMBER**	**SYMBOL/DESCRIPTION**
A	1	R3705,R3734	RS1/16S100J	-	Deleted	
A	1		Add	-	RD1/4PM100J	R3741,R3742

PIONEER CORPORATION

Y.YAMAMOTO ,MANAGER
HE

Service Engineering Section
Service Division

NOTE:PARTS CODE
1;Changeable from old to new.
2:Not Interchangeable an all.
3:Interchangeable in both ways
5:Do not use old parts

Memo: SPC55-399 AN 69
AA-D3051

Classify:

Pioneer

SERVICE INFORMATION

Date: Feb.26, 2001 **No.:** **SI-D01034-G** **(1/3)**

MODEL No. * **SER.No.** **S/M No.** **PG**

See to following page

	#	DETAIL
SYMPTOM	1	CRT spot burning
CAUSE	1	The electrical discharge in the CRT occurs several seconds after the power supply is turned off.
SERVICE REMEDY	1	Please see the page 3/3.
FACTORY COUNTER -MEASURE		Change the capacitors (C5107, C5157, C5207) to ACH1343 (47µF/250V) and change of Power supply Assy (AWV1797 → AWV1886)

------ Please refer to the following pages. ------

Ref *	#	CURRENT SYMBOL/DESCRIPTION	PARTS PART NUMBER	CO DE	NEW PART NUMBER	PARTS SYMBOL/DESCRIPTION
		C5107,C5157,C5207	ACH1318	2	ACH1343	C5107,C5157,C5207
		IC5101,IC5151,IC5201	TDA6120Q	2	TDA6120QN2	IC5101,IC5151,IC5201
		D5107,D5157,D5207	added	2	MTZJ5.6A	D5107,D5157,D5207
		D5108,D5158,D5208	added	2	MTZJ3.9B	D5108,D5158,D5208
		C5109,C5159,C5209	CEAT222M16	2	CEAT472M16	C5109,C5159,C5209
		R Drive Ass'y	AWZ6457	2	AWZ6601	R Drive Ass'y
		G Drive Ass'y	AWZ6458	2	AWZ6602	G Drive Ass'y
		B Drive Ass'y	AWZ6459		AWZ6603	B Drive Ass'y

PIONEER CORPORATION

Y.YAMAMOTO ,MANAGER
HE
Service Engineering Section
Service Division

NOTE:PARTS CODE
1:Changeable from old to new.
2:Not Interchangeable an all.
3:Interchangeable in both ways
5:Do not use old parts

Memo: SPC55-400

Classify:

MODEL No.	*	SER.No.	S/M No.	PG
PRO-510HD/KUXC/CA	A		ARP3047	
PRO-610HD/KUXC/CA	A			
PRO-710HD/KUXC/CA	A			
SD-532HD5/KBXC	A			
SD-532HD5/KUXC/CA	A			
SD-582HD5/KUXC/CA	A			

SERVICE REMEDY

1) Change the capacitor (C5107, C5157, C5207) to ACH1343 (47 micro F/250V)

Provided that the specific IC (IC5101, IC5151, IC5201) are used TDA6120Q in RGB Drive Ass'y, please remedy the following at the same time.

2) Change the CRT amplifier IC TDA6120Q (IC5101, IC5151, IC5201) to TDA6210QN2
3) Add the two diodes between pin2 and pin6 of the CRT amp IC (IC5101, IC5151, IC5201)

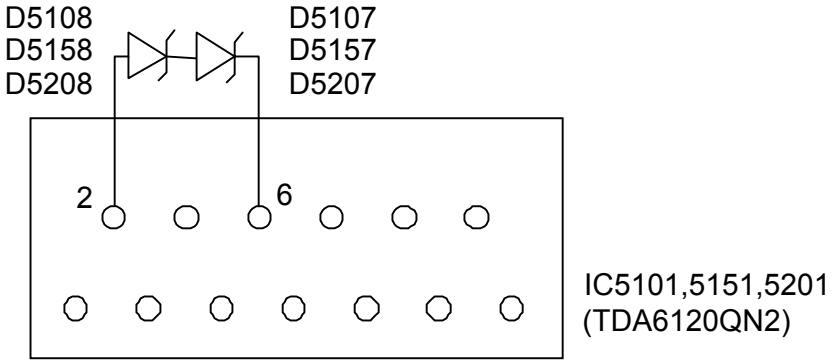

4) Change the capacitors (C5109, C5159, C5209) to CEAT472M16 (4700 micro F)

Note: each Drive Ass'y no. are changed according to this counter measure.

Pioneer

SERVICE INFORMATION

Date: Jan 25,2001 **No.:** **SI-D01033-G** **(1/1)**

MODEL No.	*	**SER.No.**	**S/M No.**	**PG**
PDP-V400/LU/CA	A	ALL		
PDP-V401/LU/CA	A	ALL		
PDP-V402/LUBW/CA	A	ALL		

	#	**DETAIL**
SYMPTOM	1	PDP repeats turning on and off.
CAUSE	1	Power circuit will be reset because the secondary circuit rarely works before the primary circuit works normally when the power turns on.
SERVICE REMEDY		Change of two resistors in Main Power Assy; AWR1077.
FACTORY COUNTER -MEASURE		Same as the service remedy

Ref *	#	**CURRENT SYMBOL/DESCRIPTION**	**PARTS PART NUMBER**	**CO DE**	**NEW PART NUMBER**	**PARTS SYMBOL/DESCRIPTION**
A	1	R3107	RD1/2PM473J		RD1PM153J	R3107
A	1	R3108	RD1/2PM563J		RD1PM153J	R3108

PIONEER SERVICE NETWORK CORPORATION

M.EGASHIRA ,MANAGER

BS Service Administration Group
BS Service Division

NOTE:PARTS CODE
1:Changeable from old to new.
2:Not Interchangeable an all.
3:Interchangeable in both ways
5:Do not use old parts

Memo: MTV01-049

Classify: NM-7

Pioneer

SERVICE INFORMATION

Date: May.23, 2001 **No.:** **SI-D01032** **(1/1)**

MODEL No.	*****	**SER.No.**	**S/M No.**	**PG**
PDP-502MX/LUCBW/1	A	Running Change	ARP3075	
PDP-502MX/YVLDK/1	A	Running Change	ARP3075	
PDP-505HD/KUC/1	A	Running Change	ARP3080	

	#	**CHANGE**
DETAIL	1	Change of X Drive Assy and Y Drive Assy
REASON	1	Please be careful not to confuse new parts with old parts in the same units.

Ref		**CURRENT**	**PARTS**	**CO**	**NEW**	**PARTS**
*****	**#**	**SYMBOL/DESCRIPTION**	**PART NUMBER**	**DE**	**PART NUMBER**	**SYMBOL/DESCRIPTION**
A	1	X Drive Assy	AWV1842	-	AWV1862	X Drive Assy
A	1	Y Drive Assy	AWV1847	-	AWV1863	Y Drive Assy

PIONEER CORPORATION

M.EGASHIRA ,MANAGER
BS
Service Engineering Section
Service Division

NOTE:PARTS CODE
1;Changeable from old to new.
2:Not Interchangeable an all.
3:Interchangeable in both ways
5:Do not use old parts

Memo: SPC55-372
AA-D2434

Classify: NM-70

Pioneer

SERVICE INFORMATION

Date: Mar. 13,2001 **No.:** **SI-D01031** **(1/1)**

MODEL No.	*****	**SER.No.**	**S/M No.**	**PG**
PDP-V402/LUBW/CA/1	A	Running Change	ARP3081	38

	#	**CHANGE**
DETAIL	1	Deletion and change of resistors in COMPLEX (B) ASSY
REASON	1	To improve performance

Ref		**CURRENT**	**PARTS**	**CO**	**NEW**	**PARTS**
*****	**#**	**SYMBOL/DESCRIPTION**	**PART NUMBER**	**DE**	**PART NUMBER**	**SYMBOL/DESCRIPTION**
A	1	R7652	RS1/16S1502F	-	Deleted	
A	1	R7657	RS1/16S3302F	-	RS1/16S223J	R7657

PIONEER CORPORATION

M.EGASHIRA ,MANAGER
BS
Service Engineering Section
Service Division

NOTE:PARTS CODE
1;Changeable from old to new.
2:Not Interchangeable an all.
3:Interchangeable in both ways
5:Do not use old parts

Memo: SPC55-353
AA-D3020

Classify: NM-70

Pioneer

SERVICE INFORMATION

Date: Jun.22, 2001 **No.:** **SI-D01030** **(1/1)**

MODEL No.	*	**SER.No.**	**S/M No.**	**PG**
PRO-510HD/KUXC/CA	A	R/C	ARP3047	110
PRO-610HD/KUXC/CA	A	R/C	ARP3047	
PRO-710HD/KUXC/CA	A	R/C		
SD-532HD5/KUXC/CA	A	R/C	ARP3047	
SD-582HD5/KUXC/CA	A	R/C	ARP3047	
SD-532HD5/KBXC	A	R/C	ARP3047	

	#	**CHANGE**
DETAIL	1	Change of capacitors in R CRT DRIVE Assy, G CRT DRIVE Assy and B CRT DRIVE Assy

REASON	1	Production convenience

P.110 R CRT DRIVE Assy loc. B-2
G CRT DRIVE Assy loc. D-2
P.111 B CRT DRIVE Assy loc. C-5

IC: TDA6120QN2

Delete
C5116
C5166
C5216

C5109
C5159
C5209

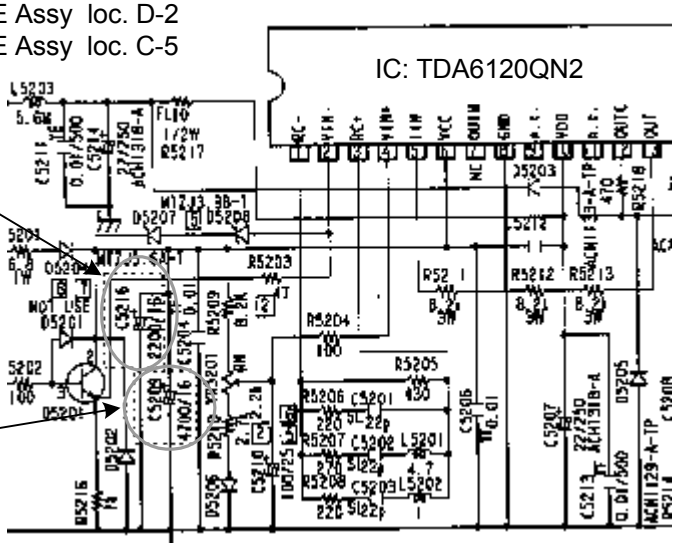

ex. B CRT DRIVE Assy

NOTE: The deleted capacitors(C5116,C5166,C5216) does not described S/M. These parts was added by design change. Please refer to the additional location in the above circuit.

Ref		**CURRENT**	**PARTS**	**CO**	**NEW**	**PARTS**
*	#	**SYMBOL/DESCRIPTION**	**PART NUMBER**	**DE**	**PART NUMBER**	**SYMBOL/DESCRIPTION**
A	1	C5109,C5159,C5209	CEAT222M16	2	CEAT472M16	C5109,C5159,C5209
A	1	C5116,C5166,C5216	CEAT222M16	-	Deleted	

PIONEER CORPORATION

Y.YAMAMOTO ,MANAGER
HE

Service Engineering Section
Service Division

NOTE:PARTS CODE
1;Changeable from old to new.
2:Not Interchangeable an all.
3:Interchangeable in both ways
5:Do not use old parts

Memo: SPC55-346 AN 9

Classify: