FUNAI

SERVICE MANUAL

20" COLOR TELEVISION

TV-2000T MK10 HYPER

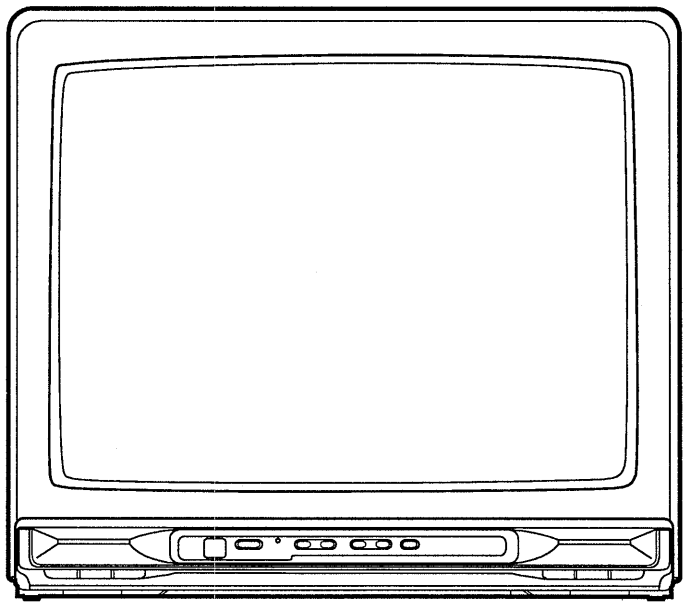

APR. 10. 1997

IMPORTANT SAFETY NOTICE

Proper service and repair is important to the safe, reliable operation of all Funai Equipment. The service procedures recommended by Funai and described in this service manual are effective methods of performing service operations. Some of these service special tools should be used when and as recommended.

It is important to note that this service manual contains various CAUTIONS and NOTICES which should be carefully read in order to minimize the risk of personal injury to service personnel. The possibility exists that improper service methods may damage the equipment. It also is important to understand that these CAUTIONS and NOTICES ARE NOT EXHAUSTIVE. Funai could not possibly know, evaluate and advice the service trade of all conceivable ways in which service might be done or of the possible hazardous consequences of each way. Consequently, Funai has not undertaken any such broad evaluation. Accordingly, a servicer who uses a service procedure or tool which is not recommended by Funai must first use all precautions thoroughly so that neither his safety nor the safe operation of the equipment will be jeopardized by the service method selected.

TABLE OF CONTENTS

Performance Specifications 1-1
Important Safety Precautions 2-1
Disassembly Instructions 3-1
Electrical Adjustment Instructions 4-1
Block Diagram 5-1
Schematic Diagram / PCB's and Test Points 6-1
Schematic diagrams 6-4
CBA Views and Test Points 6-6
Waveforms 7-1
Wiring Diagram 8-1
Cabinet Exploded View 9-1
Packing Exploded View 10-1
Mechanical Parts List 11-1
Electrical Parts List 12-1

PERFORMANCE SPECIFICATIONS

<Tuner>

VHF/UHF Input: 75Ω Unbalanced, IEC connector
Reference Level: 20Vp-p (CRT Green Cathode)
Input Signal: 400Hz, 30%AM

Description	Condition	Unit	Nominal	Limit
1. Intermediate Frequency	Picture	MHz	38.0	—
	Sound	MHz	31.5(D/K)	—
	Sound	MHz	32.5(B/G)	—
2. Peak Picture Sens.	VHF	dBμV	20	30
	UHF	dBμV	20	40
3. AFT Pull In Range (80 dBμ)		MHz	+1.0	±0.5

<Deflection>

Description	Condition	Unit	Nominal	Limit
1. Deflection Frequency	Horizontal (PAL/SECAM)	KHz	15.625	—
	(NTSC)	KHz	15.750	—
	Vertical (PAL/SECAM)	Hz	50	—
	(NTSC)	Hz	60	—
2. Linearity	Horizontal	%	—	±15
	Vertical	%	—	±15
3. High Voltage		KV	25	—
4. Over Scan	Horizontal	%	10	—
	Vertical	%	10	—

<Video & Chroma)

Description	Condition	Unit	Nominal	Limit
1. Misconvergence	Center	mm	—	0.4
	Sidde	mm	—	2.0
	Corner	mm	—	1.5
2. Brightness	APL100%	Ft-L	35	25
3. Color Temperature		°K	8000-20MPCD	—
4. Resolution	Horizontal	Line	320	300
	Vertical	Line	400	300

<Audio>

All items are measured across 8Ω load at speaker output terminal.

Description	Condition	Unit	Nominal	Limit
1. Audio Output Power	10%THD	W	3.3	2.7
2. Audio Distortion	50mW	%	2	5
3. Audio Frequency Response	-6dB	Hz	—	100-6K

IMPORTANT SAFETY PRECAUTIONS

Prior to shipment from the factory, our products are strictly inspected for recognized product safety and electrical codes of the countries in which they are to be sold. However, in order to maintain such compliance, it is equally important to implement the following precautions when a set is being serviced.

Safety Precautions for TV Circuit

1. **Before returning an instrument to the customer,** always make a safety check of the entire instrument, including, but not limited to, the following items:

a. Be sure that no built-in protective devices are defective and have been defeated during servicing. (1) Protective shields are provided on this chassis to protect both the technician and the customer. Correctly replace all missing protective shields, including any removed for servicing convenience. (2) When reinstalling the chassis and/or other assembly in the cabinet, be sure to put back in place all protective devices, including but not limited to, nonmetallic control knobs, insulating fishpapers, adjustment and compartment covers/shields, and isolation resistor/capacitor networks. **Do not operate this instrument or permit it to be operated without all protective devices correctly installed and functioning. Servicers who defeat safety features or fail to perform safety checks may be liable for any resulting damage.**

b. Be sure that there are no cabinet openings through which an adult or child might be able to insert their fingers and contact a hazardous voltage. Such openings include, but are not limited to, (1) spacing between the picture tube and the cabinet mask, (2) excessively wide cabinet ventilation slots, and (3) an improperly fitted and/or incorrectly secured cabinet back cover.

c. **Antenna Cold Check -** With the instrument AC plug removed from any AC source, connect an electrical jumper across the two AC plug prongs. Place the instrument AC switch in the on position. Connect one lead of an ohmmeter to the AC plug prongs tied together and touch the other ohmmeter lead in turn to each tuner antenna input exposed terminal screw and, if applicable, to the coaxial connector. If the measured resistance is less than 1.0 megohm or greater than 5.2 megohm, an abnormality exists that must be corrected before the instrument is returned to the customer. Repeat this test with the instrument AC switch in the off position.

d. **Leakage Current Hot Check -** With the instrument completely reassembled, plug the AC line cord directly into a 120V AC outlet. (Do not use an isolation transformer during this test.) Use a leakage current tester or a metering system that complies with American National Standards Institute (ANSI) C101.1 Leakage Current for Appliances and Underwriters Laboratories (UL) 1410, (50.7). With the instrument AC switch first in the on position and then in the off position, measure from a known earth ground (metal water pipe, conduit, etc.) to all exposed metal parts of the instrument (antennas, handle brackets, metal cabinet, screw heads, metallic overlays, control shafts, etc.), especially any exposed metal parts that offer an electrical return path to the chassis. Any current measured must not exceed 0.5 milli-ampere. Reverse the instrument power cord plug in the outlet and repeat the test.

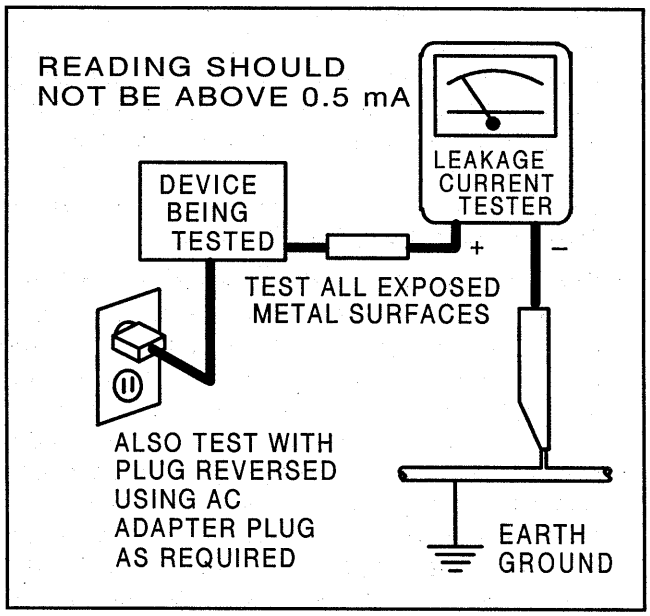

ANY MEASUREMENTS NOT WITHIN THE LIMITS SPECIFIED HEREIN INDICATE A POTENTIAL SHOCK HAZARD THAT MUST BE ELIMINATED BEFORE RETURNING THE INSTRUMENT TO THE CUSTOMER OR BEFORE CONNECTING THE ANTENNA OR ACCESSORIES.

e. **X-Radiation and High Voltage Limits -** Because the picture tube is the primary potential source of X-radiation in solid-state TV receivers, it is specially constructed to prohibit X-radiation emissions. For continued X-radiation protection, the replacement picture tube must be the same type as the original. Also, because the picture tube shields and mounting hardware perform an X-radiation protection function, they must be correctly in place. High voltage must be measured each time servicing

is performed that involves B+, horizontal deflection or high voltage. Correct operation of the X-radiation protection circuits also must be reconfirmed each time they are serviced. (X-radiation protection circuits also may be called "horizontal disable" or "hold down.") Read and apply the high voltage limits and, if the chassis is so equipped, the X-radiation protection circuit specifications given on instrument labels and in the Product Safety & X-Radiation Warning note on the service data chassis schematic. High voltage is maintained within specified limits by close tolerance safety-related components/adjustments in the high-voltage circuit. If high voltage exceeds specified limits, check each component specified on the chassis schematic and take corrective action.

2. Read and comply with all caution and safety-related notes on or inside the receiver cabinet, on the receiver chassis, or on the picture tube.

3. Design Alteration Warning - Do not alter or add to the mechanical or electrical design of this TV receiver. Design alterations and additions, including, but not limited to circuit modifications and the addition of items such as auxiliary audio and/or video output connections, might alter the safety characteristics of this receiver and create a hazard to the user. Any design alterations or additions will void the manufacturer's warranty and may make you, the servicer, responsible for personal injury or property damage resulting therefrom.

4. Picture Tube Implosion Protection Warning - The picture tube in this receiver employs integral implosion protection. For continued implosion protection, replace the picture tube only with one of the same type number. Do not remove, install, or otherwise handle the picture tube in any manner without first putting on shatterproof goggles equipped with side shields. People not so equipped must be kept safely away while picture tubes are handled. Keep the picture tube away from your body. Do not handle the picture tube by its neck. Some "in-line" picture tubes are equipped with a permanently attached deflection yoke; because of potential hazard, do not try to remove such "permanently attached" yokes from the picture tube.

5. Hot Chassis Warning -

a. Some TV receiver chassis are electrically connected directly to one conductor of the AC power cord and may be safety-serviced without an isolation transformer only if the AC power plug is inserted so that the chassis is connected to the ground side of the AC power source. To confirm that the AC power plug is inserted correctly, with an AC voltmeter, measure between the chassis and a known earth ground. If a voltage reading in excess of 1.0V is obtained, remove and reinsert the AC power plug in the opposite polarity and again measure the voltage potential between the chassis and a known earth ground.

b. Some TV receiver chassis normally have 85V AC(RS) between chassis and earth ground regardless of the AC plug polarity. This chassis can be safety-serviced only with an isolation transformer inserted in the power line between the receiver and the AC power source, for both personnel and test equipment protection.

c. Some TV receiver chassis have a secondary ground system in addition to the main chassis ground. This secondary ground system is not is- olated from the AC power line. The two ground systems are electrically separated by insulation material that must not be defeated or altered.

6. Observe original lead dress. Take extra care to assure correct lead dress in the following areas: a. near sharp edges, b. near thermally hot parts-be sure that leads and components do not touch thermally hot parts, c. the AC supply, d. high voltage, and e. antenna wiring. Always inspect in all areas for pinched, out of place, or frayed wiring. Check AC power cord for damage.

7. Components, parts, and/or wiring that appear to have overheated or are otherwise damaged should be replaced with components, parts, or wiring that meet original specifications. Additionally, determine the cause of overheating and/or damage and, if necessary, take corrective action to remove any potential safety hazard.

8. Product Safety Notice - Some electrical and mechanical parts have special safety-related characteristics which are often not evident from visual inspection, nor can the protection they give necessarily be obtained by replacing them with components rated for higher voltage, wattage, etc.. Parts that have special safety characteristics are identified by a (⚠) on schematics and in parts lists. Use of a substitute replacement that does not have the same safety characteristics as the recommended replacement part might create shock, fire, and/or other hazards. The Product's Safety is under review continu- ously and new instructions are issued whenever appropriate. Prior to shipment from the factory, our products are strictly inspected to confirm with the recognized product safety and electrical codes of the countries in which they are to be sold. However, in order to maintain such compliance, it is equally important to implement the following precautions when a set is being serviced.

Precautions during Servicing

A. Parts identified by the (⚠) symbol are critical for safety.

Replace only with part number specified.

B. In addition to safety, other parts and assemblies are specified for conformance with regulations applying to spurious radiation. These must also be replaced only with specified replacements.

Examples: RF converters, RF cables, noise blocking capacitors, and noise blocking filters, etc.

C. Use specified internal wiring. Note especially:

1) Wires covered with PVC tubing
2) Double insulated wires
3) High voltage leads

D. Use specified insulating materials for hazardous live parts. Note especially:

1) Insulation Tape
2) PVC tubing
3) Spacers
4) Insulators for transistors.

E. When replacing AC primary side components (transformers, power cord, etc.), wrap ends of wires securely about the terminals before soldering.

F. Observe that the wires do not contact heat producing parts (heatsinks, oxide metal film resistors, fusible resistors, etc.)

G. Check that replaced wires do not contact sharp edged or pointed parts.

H. When a power cord has been replaced, check that 10-15 kg of force in any direction will not loosen it.

I. Also check areas surrounding repaired locations.

J. Use care that foreign objects (screws, solder droplets. etc.) do not remain inside the set.

K. Crimp type wire connector

When replacing the power transformer in sets where the connections between the power cord and power transformer primary lead wires are performed using crimp type connectors, in order to prevent shock hazards, perform carefully and precisely the following steps.

Replacement procedure

1) Remove the old connector by cutting the wires at a point close to the connector.

   Important: Do not re-use a connector (discard it).

2) Strip about 15 mm of the insulation from the ends of the wires. If the wires are stranded, twist the strands to avoid frayed conductors.
3) Align the lengths of the wires to be connected. Insert the wires fully into the connector.
4) Use the crimping tool to crimp the metal sleeve at the center position. Be sure to crimp fully to the complete closure of the tool.

L. When connecting or disconnecting the VCR connectors, first, disconnect the AC plug from AC supply socket.

Safety Check after Servicing

Examine the area surrounding the repaired location for damage or deterioration. Observe that screws, parts and wires have been returned to original positions. Afterwards, perform the following tests and confirm the specified values in order to verify compliance with safety standards.

1. Clearance Distance

When replacing primary circuit components, confirm specified clearance distance (d) and (d') between soldered terminals, and between terminals and surrounding metallic parts. (See Fig. 1)

Table 1 : Ratings for selected area

AC Line Voltage	Region	Clearance Distance (d) (d')
200 to 240 V	Europe Australia	≥ 4 mm (d) ≥ 6 mm (d')

Note: This table is unofficial and for reference only. Be sure to confirm the precise values.

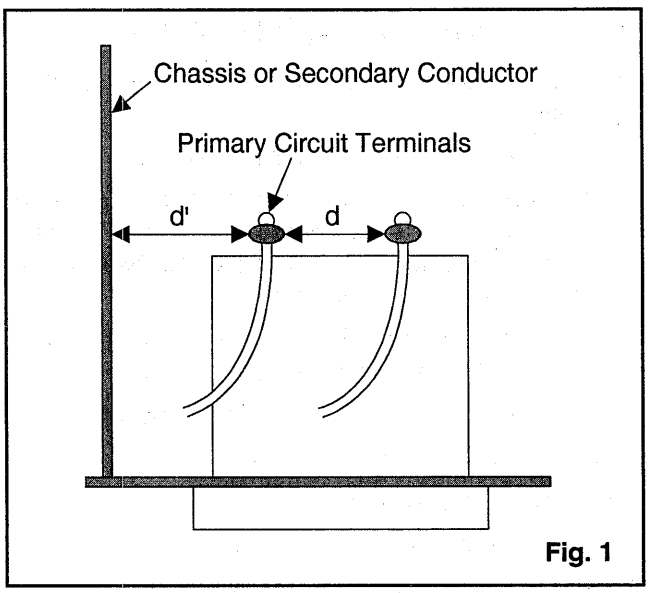

Fig. 1

2. Leakage Current Test

Confirm specified (or lower) leakage current between B (earth ground, power cord plug prongs) and externally exposed accessible parts (RF terminals, antenna terminals, video and audio input and output terminals, microphone jacks, earphone jacks, etc.).

Measuring Method : (Power ON)

Insert load Z between B (earth ground, power cord plug prongs) and exposed accessible parts. Use an AC voltmeter to measure across both terminals of load Z. See Fig. 2 and following table.

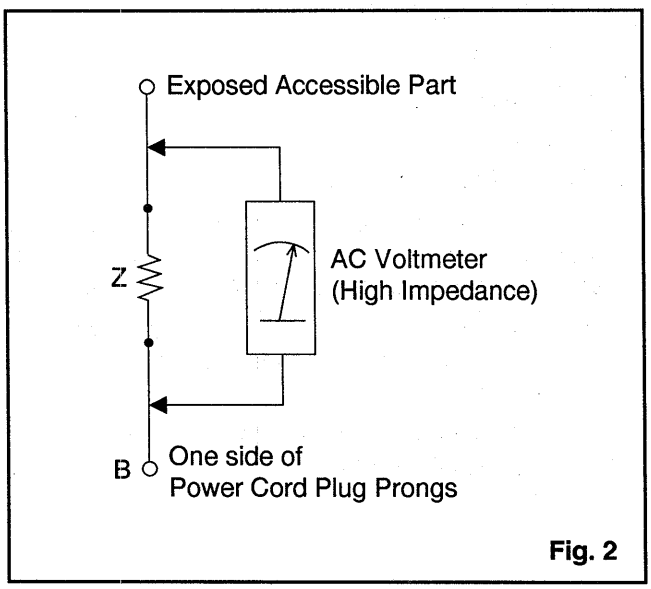

Fig. 2

Table 2 : Leakage current ratings for selected areas

AC Line Voltage	Region	Load Z	Leakage Current (i)	Earth Ground (B) to:
200 to 240V	Europe Australia	2kΩ RES. in connected	i≤0.7mA rms i≤2mA dc	Antenna terminals
		50kΩ RES. in connected	i≤0.7mA rms i≤2mA dc	Other terminals

Note: This table is unofficial and for reference only. Be sure to confirm the precise values.

DISASSEMBLY INSTRUCTIONS

1. Disassembly Flow Chart

This flow chart indicates the disassembly steps of the cabinet parts and CBA in order to gain access to item(s) to be serviced. When reassembling, perform the step(s) in the reverse order. Bend, route and dress the cables as they were originally.

CAUTION ! :
When removing the CRT, make sure to discharge Anode Lead of the CRT.
Use the CRT Ground Wire to discharge the CRT before removing the Anode Cap.

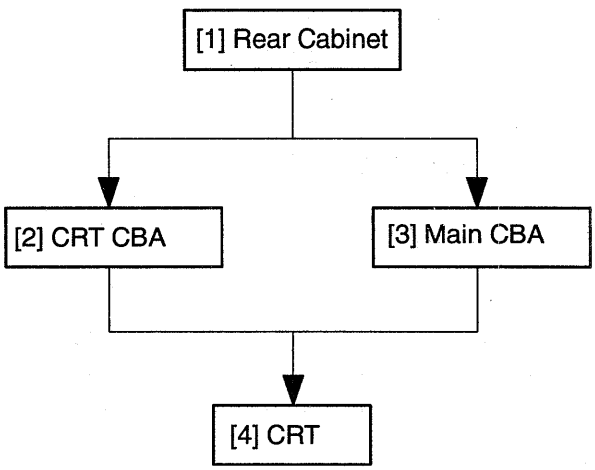

2. Disassembly Method

STEP/ LOC. NO.	PART	REMOVAL		
		FIG. NO.	REMOVE/*UNLOCK/ RELEASE/UNPLUG/ UNCLAMP/ DESOLDER	NOTE
[1]	Rear Cabinet	1, 2	L-5 (4pcs), L-6, L-7	1
[2]	CRT CBA	4, 5	CN451B, CN452B, CN453, FOCUS WIRE, SCREEN WIRE	2
[3]	Main CBA	3, 5	CN451A, CN452A, CN501, CN601, CN801, CN802, ANODE CAP, FOCUS WIRE, SCREEN WIRE	3
[4]	CRT	4, 5	B-2 (4pcs)	4

General Note:
"CBA" is an abbreviation for "Circuit Board Assembly".

Reference <Notes> in Table

1. (1) Remove 6 screws (L-5, L-6, L-7) and slide the Rear Cabinet backward.
2. (1) If not already removed, first remove the Rear Cabinet.

   (2) Remove all relative wires, then pull the CRT CBA backward.
3. (1) If not already removed, first remove the Rear Cabinet.

   (2) Remove all relative wires on the Main CBA and remove the Anode Cap, then slide the Main CBA backward.

Caution !
Discharge Anode Lead of the CRT with the CRT Ground Wire before removing the Anode Cap.

4. (1) If not already removed, first remove the Rear Cabinet and Main CBA.

   (2) Remove 4 screws (B-2), then the CRT can be removed.

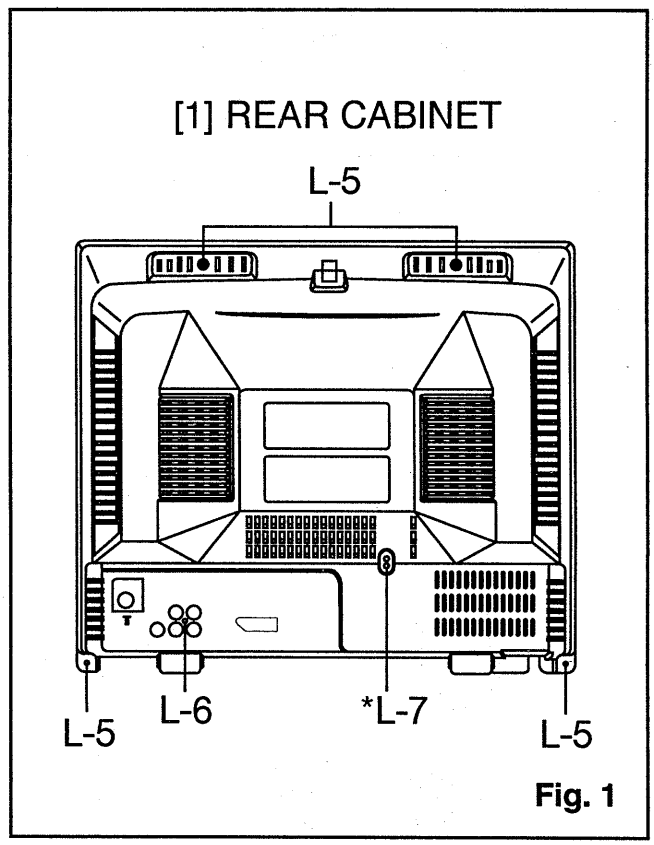

Fig. 1

*L-7 Must be used Tapping Screw M4 x 14mm otherwise broken or damage for the F.B.T.

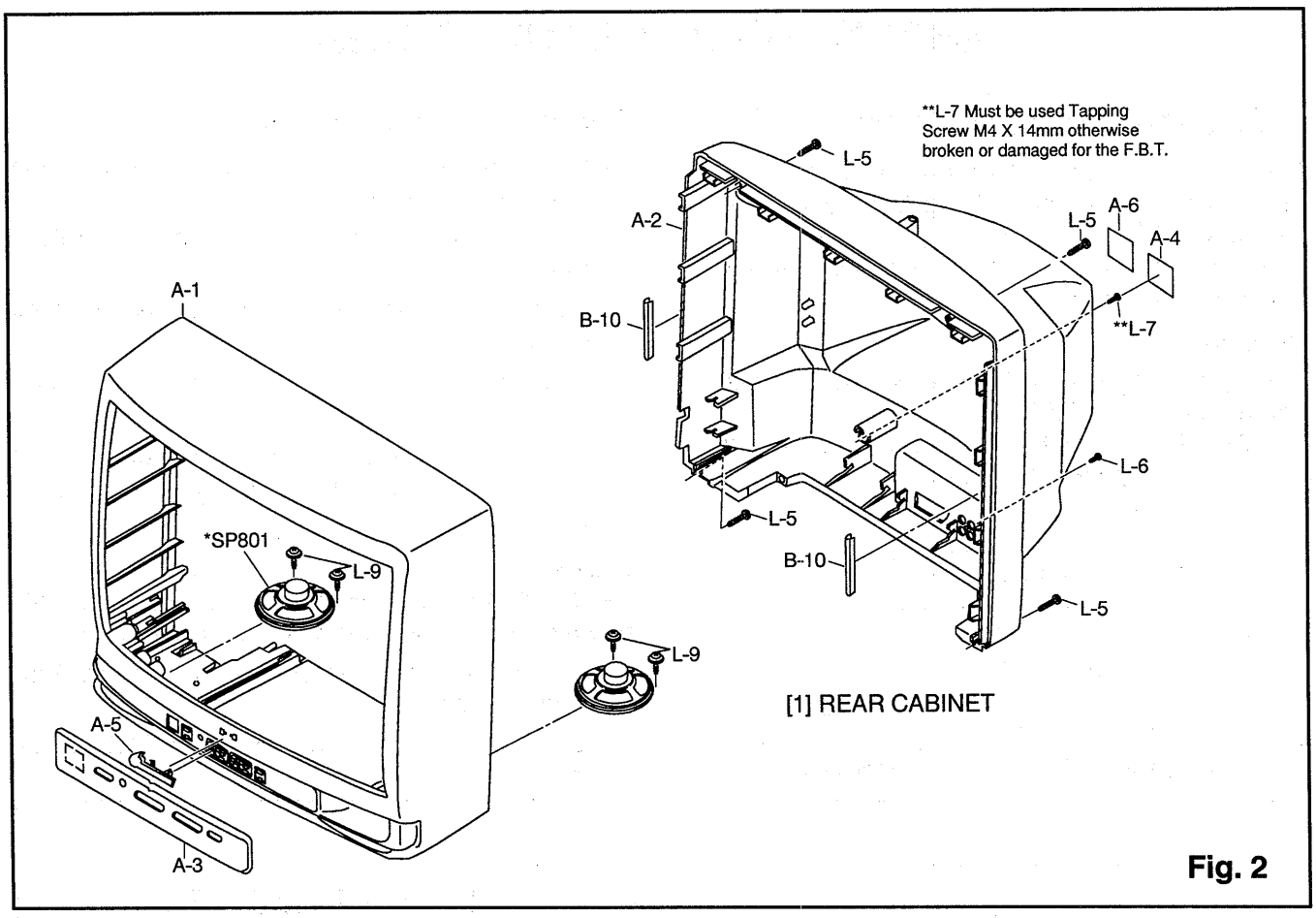
**L-7 Must be used Tapping Screw M4 X 14mm otherwise broken or damaged for the F.B.T.
L-5
A-2
L-5
A-6
A-4
A-1
B-10
**L-7
L-6
L-5
*SP801
L-9
B-10
L-5
L-9
[1] REAR CABINET
A-5
A-3

Fig. 2

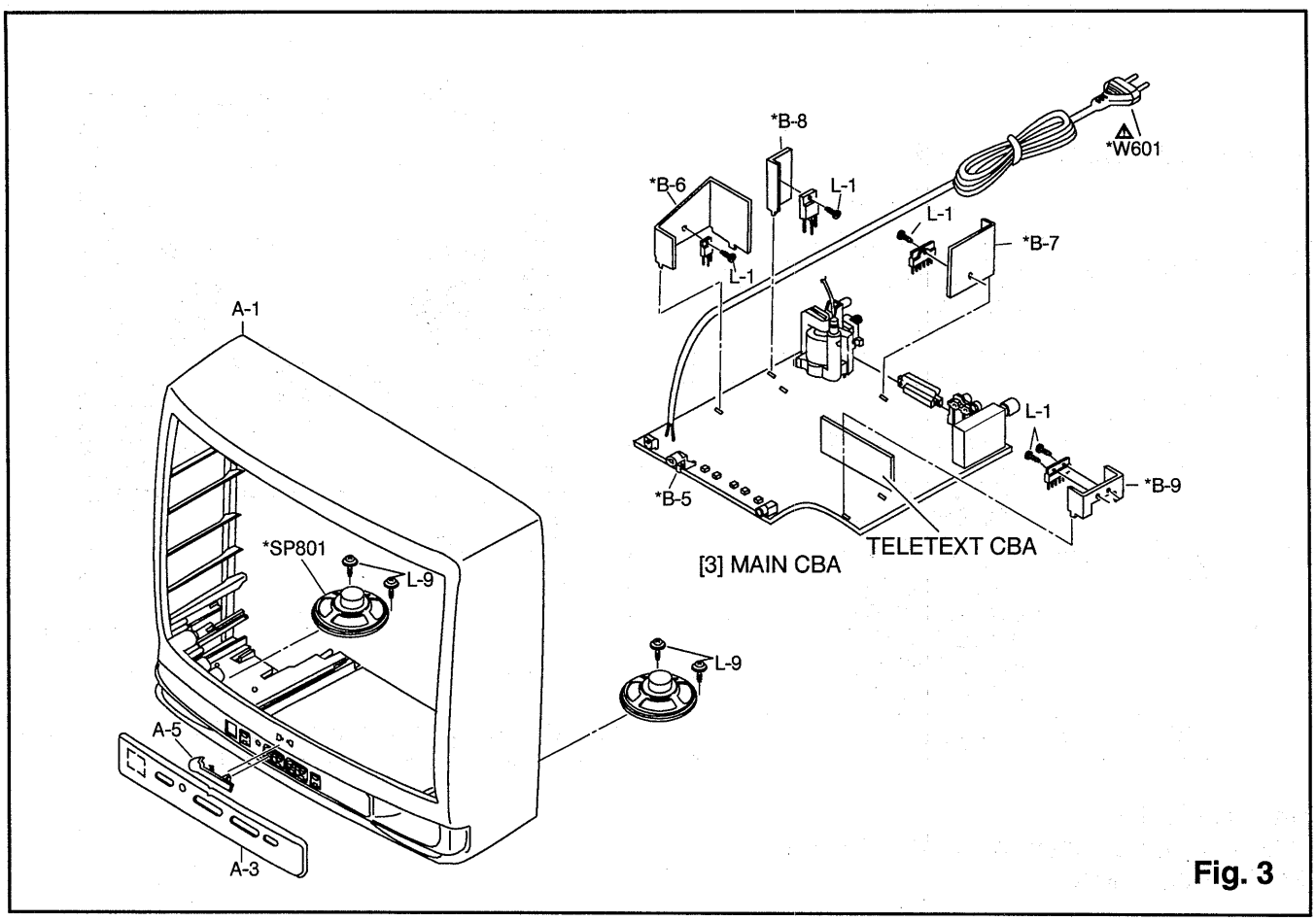
*B-8
*W601
*B-6
L-1
L-1
*B-7
L-1
A-1
L-1
*B-9
*B-5
TELETEXT CBA
[3] MAIN CBA
*SP801
L-9
L-9
A-5
A-3

Fig. 3

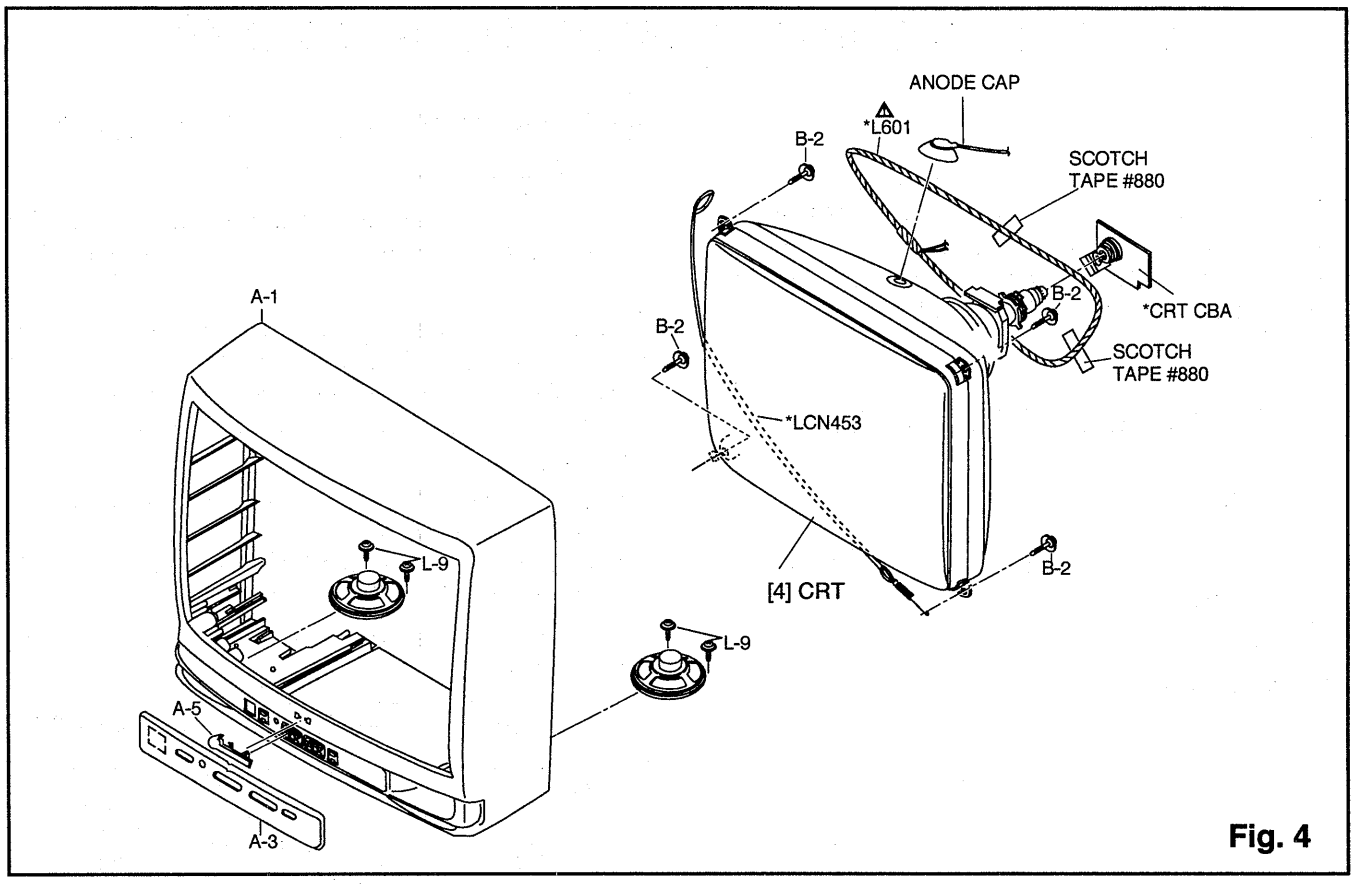
ANODE CAP
*L601
B-2
SCOTCH
TAPE #880
B-2
*CRT CBA
SCOTCH
TAPE #880
A-1
B-2
*LCN453
L-9
[4] CRT
B-2
L-9
A-5
A-3

Fig. 4

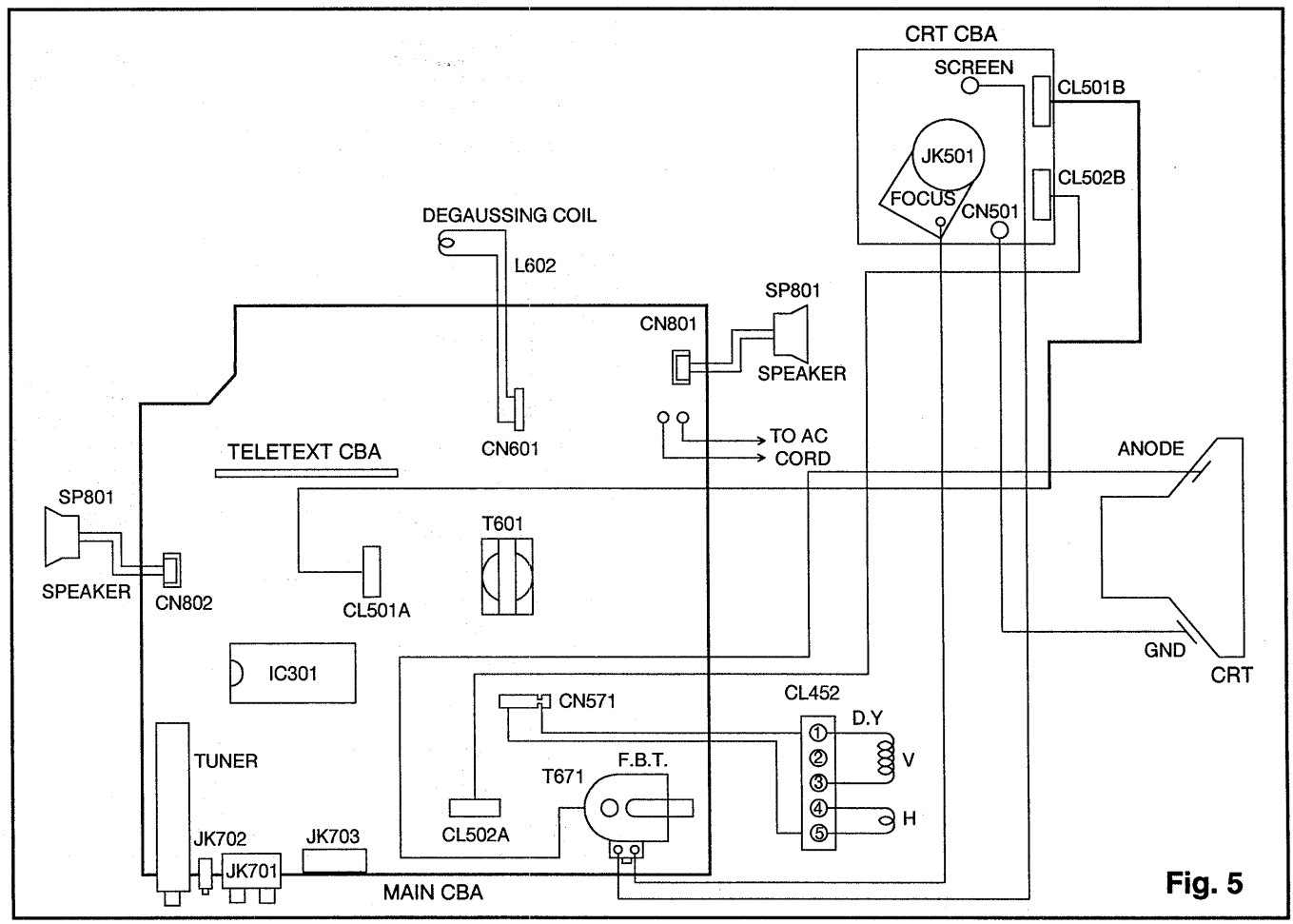
CRT CBA
SCREEN
CL501B
JK501
CL502B
FOCUS
CN501
DEGAUSSING COIL
L602
SP801
CN801
SPEAKER
TO AC
CORD
CN601
TELETEXT CBA
ANODE
SP801
T601
SPEAKER
CN802
CL501A
GND
CRT
IC301
CN571
CL452
D.Y
TUNER
F.B.T.
V
T671
H
CL502A
JK702
JK703
JK701
MAIN CBA

Fig. 5

ELECTRICAL ADJUSTMENT INSTRUCTIONS

NOTE:

Electrical adjustments are required after replacing circuit components. It is important to perform these adjustments only after all repairs and replacements have been completed. Also, do not attempt these adjustments unless the proper equipment is available.

TEST EQUIPMENT REQUIRED:

1. IF Sweeper
2. DC Volt Meter
3. Oscilloscope: Dual Trace with 10:1 probe
4. PAL Pattern Generator
5. Monoscope
6. Color Analyzer

SYSTEM CONTROL IC DATA AND INITIAL VALUE

Following DATA are shown on the TV picture when the unit is in the Service mode and select Specified ITEM only.

To set the unit in service mode, short test point (TP) marked FACTORY MODE which is indicated on the main schematic diagram, until appear red F on screen. To escape service mode, push function key on the Remote control Unit.

Note: Showing DATA values are only reference as INITIAL and these values are not match any Alignment Voltages which are described in this ELECTRICAL ADJUSTMENT INSTRUCTIONS.

* KEY NO. --- Use 10 Key Number on the Remote Control Unit.

ITEM	*KEY NO.	DATA	REMARK
BRIGHT (CENTER)	0 (Changes Cyclical)	61	DATA Values will be changed by press the CH UP/DOWN button on the Remote control Unit
CONTRAST (70%)		62	
COLOR (CENTER)		46	
TINT (CENTER)		48	
SHARPNESS (CENTER)		32	
SERVICE MODE	1		
AGC	2	32	DATA Values will be changed by press the CH UP/DOWN button on the Remote control Unit
VCO	3	32	
H. POSITION	4	8	
P-SELECT (H/L) H-STEP (R)	5	-1	
STEP (B) H-STEP (B)		+6	
L-STEP (R)		+1	
L-STEP (B)		-4	
STATIC CONV. ADJ	6		
PURITY CHECK MODE	7		
CUT OFF (R)	8	80	
CUT OFF (G)		80	
CUT OFF (B)		80	
DRIVER (R)	9	32	
DRIVER (B)		32	

All adjustment procedures must be performed in order of numbering.

1. POWER SUPPLY DC VOLTAGE ADJUSTMENT

Purpose: To get correct voltage.

Symptom of Misadjustment: If voltage is incorrect, picture is dark.

Test Point	Adjustment Point	Mode	Input
D621	VR621		Monoscope Pattern
Tape	**Measurement Equipment**	**Spec.**	
	DC Volt Meter Monoscope	+112±0.5V	

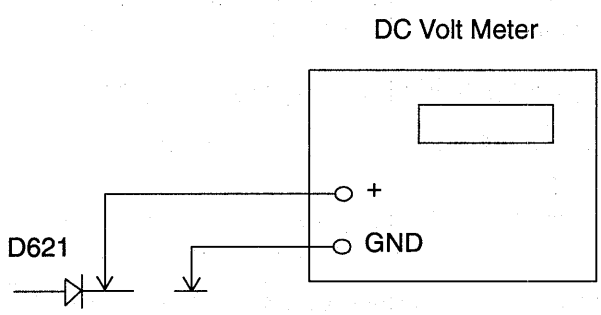

Reference Notes: D621, VR621 --- Power Supply CBA

1. Connect the equipment as shown in the above table.
2. Adjust VR621 so that the DC Volt becomes +112±0.5V on the DC Volt Meter.

2. AFT ADJUSTMENT

Purpose: To operate AFT correctly.

Symptom of Misadjustment: AFT does not work correctly and/or synchronization is faulty.

Test Point	Adjustment Point	Mode	Input
TP 7 GND	L35		38.0MHz 90dBμV
Tape	**Measurement Equipment**	**Spec.**	
	PAL Pattern Generator, DC Volt Meter	+2.5±0.2V	

Figure

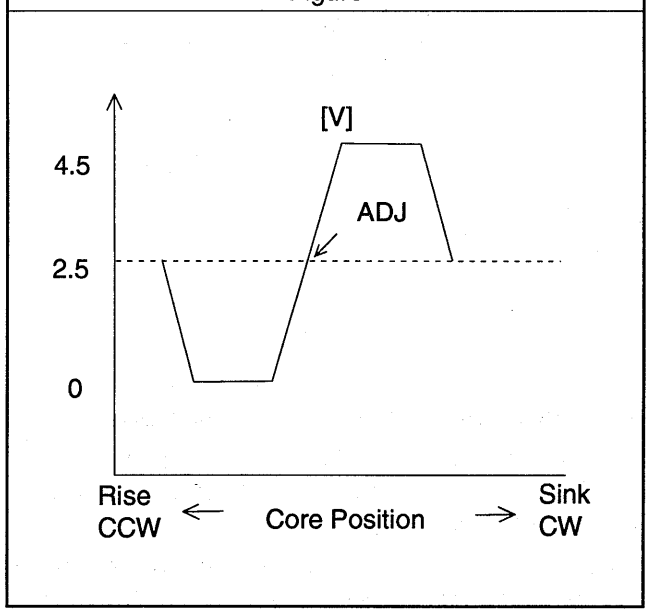

Reference Notes: TP 7, L35 --- Main CBA

1. Input the 38.0MHz signal to Q31 (Base).(Input level 90dBμV Non-Modulation)
2. Connect the Digital volt meter to the TP 7 and GND.
3. Turn the core of L35 fully counterclockwise
4. Turn the core of L35 clockwise and find the point where the voltage drops from approximately 4.5V to 0V immediately on the Digital volt meter.
5. turn core of L35 little by little and find the point whereDC +2.5±0.2V is obtained between the area mentioned in step3.

3. RF AGC ADJUSTMENT (for TUNER)

Purpose: Set AGC (Auto Gain Control) Level.

Symptom of Misadjustment: AGC does not synchronize correctly when RF Input Level is weak and distortion may cause on the picture when it is strong.

Test Point	Adjustment Point	Mode	Input
TP 8 GND	Service Mode No.2		PAL Color Bar
Tape	**Measurement Equipment**	**Spec.**	
	PAL Pattern Generator, DC Volt Meter	+3.0±0.1V	

Figure

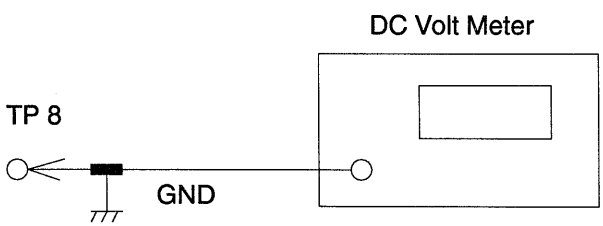

Reference Notes: TP 8, GND --- Main CBA

1. Receive the PAL Color Bar signal for 2ch (62.25MHz). (RF input level 80dBμV at the best synchronized point)
2. Connect the equipment as shown in the above table. Enter the Service mode then press No.2 button on the Remote Control Unit.
3. Press CH UP/DOWN button on the Remote Control so that the DC Volt Becomes +3.0±0.1V on the DC Volt Meter.

4. V. SIZE ADJUSTMENT

Purpose: To get correct vertical size of screen image.

Symptom of Misadjustment: Vertical size of screen image may not be properly displayed.

Test Point	Adjustment Point	Mode	Input
Screen	VR541		Monoscopic Pattern
Tape	**Measurement Equipment**	**Spec.**	
	Monoscope	90±2%	

Reference Note: VR541 --- Main CBA

1. Operate the unit more than 20 minutes.
2. Input the Monoscopic Pattern.
3. Adjust VR541 so that the vertical size will be 90±5% of Monoscopic Pattern and the circle is round.

5. H. POSITION ADJUSTMENT

Purpose: To get correct horizontal position of screen image.

Symptom of Misadjustment: Horizontal position of screen image may not be properly displayed.

Test Point	Adjustment Point	Mode	Input
Screen	Service Mode No.4		Monoscopic Pattern
Tape	**Measurement Equipment**	**Spec.**	
	Monoscope	90+5/-2%	

Reference Note:

1. Operate the unit more than 20 minutes.
2. Input the Monoscopic Pattern.
3. Enter the Service mode . then press No.4 button on the Remote Control Unit.
4. Press CH UP/DOWN button so the the right and left picture will be equal.

5. V. POSITION ADJUSTMENT

Purpose: To get correct vertical position (Center) of screen image.

Symptom of Misadjustment: Vertical position of screen image may not be properly displayed.

Test Point	Adjustment Point	Mode	Input
Screen	VR542		Monoscopic Pattern
Tape	**Measurement Equipment**	Spec.	
	PAL Pattern Generator	Center	

Reference Note:

1. Operate the unit more than 20 minutes.
2. Input the Monoscopic Pattern.
3. Adjust VR542 so that the Monoscopic Pattern will stay on the center of screen.

6. BLACK LEVEL ADJUSTMENT

Purpose: To obtain optimum picture quality.

Symptom of Misadjustment: Black color may not be properly displayed (lighter or darker)

Test Point	Adjustment Point	Mode	Input
TP 501	Service Mode No. 0 (Bright)		Black Raster
Tape	**Measurement Equipment**	**Spec.**	
	Oscilloscope	+3.0±0.05V	

Figure

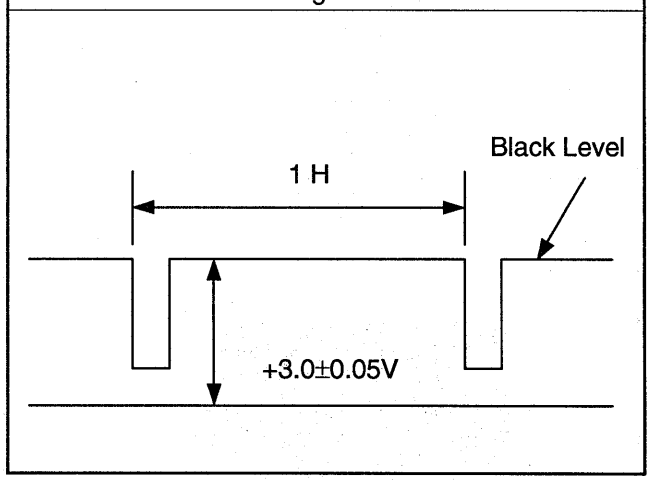

Reference Notes: TP501, GND --- Main CBA

1. Enter the Service Mode and Press "0" button on the Remote control Unit. Then Set screen to "Bright".
2. Connect the Oscilloscope to the TP501(Blue output).
3. Press CH Up/Down Key so that the Voltage of TP501 becomes +3.0±0.05V.

7. CUT OFF ADJUSTMENT

Purpose: To adjust the beam current of R, G, B and screen voltage.

Symptom of Misadjustment: White color may be reddish, greenish or bluish.

When the screen voltage is too high, the scanning line is appeared on the screen.

Test Point	Adjustment Point	Mode	Input
Screen	Service Mode No.8 Screen Control (FBT)		Service Mode No.1
Tape	**Measurement Equipment**	**Spec.**	
	PAL Pattern Generator,	See below	

Figure

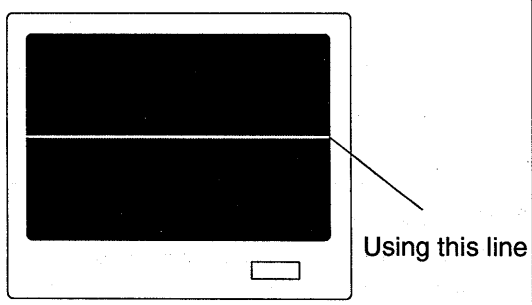

Reference Notes: Screen Control --- H/V CBA

1. Operate the unit more than 20 minutes.
2. Degauss the CRT using Degaussing Coil.
3. Input the Black Raster.
4. Turn the Screen Control (FBT) fully counterclockwise.
5. Enter the Service Mode. then press No. 8 button on the Remote Control Unit.
6. Press Red button for Red adjustment. Press Green button for Green adjustment. Press Blue button for Blue adjustment.
7. In each color mode, Press CH UP / DOWN button to adjust the values of colors.
8. Mixing Red, Green and Blue colors so that the Holizontal Line becomes Dim and White.
9. Turn power off and on again to return to normal mode.

Note: Confirm that White Balance Adj. is correct after this adjustment, and attempt
White Balance Adj. if needed.

8. SUB BRIGHT ADJUSTMENT

Purpose: To get proper brightness.

Symptom of Misadjustment: Proper brightness cannot be obtained by adjusting the Bright Control.

Test Point	Adjustment Point	Mode	Input
Screen	Screen Control (FBT)		Gray Scale Pattern
Tape	**Measurement Equipment**	**Spec.**	
	PAL Pattern Generator,	See below	

Figure

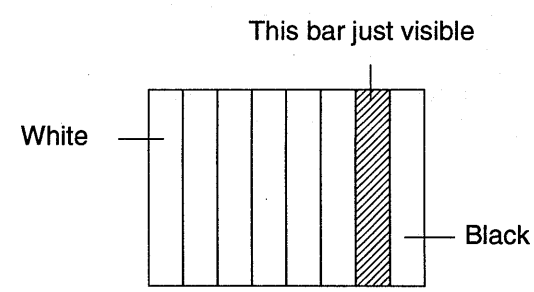

Reference Notes: Screen Control (FBT) --- Main CBA

1. Operate the unit more than 20 minutes.
2. Input the 8-step Gray Scale pattern.
3. Adjust Screen Control so that the bar is just visible. (See above figure)

9. FOCUS ADJUSTMENT

Purpose: To get correct focus.

Symptom of Misadjustment: Blurred image is shown on the display.

Test Point	Adjustment Point	Mode	Input
Screen	Focus Control (FBT)		Monoscopic Pattern
Tape	**Measurement Equipment**	**Spec.**	
	Monoscope	See below	

Reference Note: Focus-VR (FBT) --- Main CBA

1. Operate the unit more than 20 minutes.
2. Input the Monoscopic Pattern.
3. Adjust Focus Control (FBT) to be obtained clear picture.

10. WHITE BALANCE ADJUSTMENT

Purpose: To mix red, green and blue beams correctly for pure white.

Symptom of Misadjustment: White becomes bluish or reddish.

Test Point	Adjustment Point	Mode	Input
Screen	Service Mode No.9		White Raster (APL 100%)
Tape	**Measurement Equipment**	**Spec.**	
	PAL Pattern Generator, Color Analyzer	See below	

Connections of Equipment

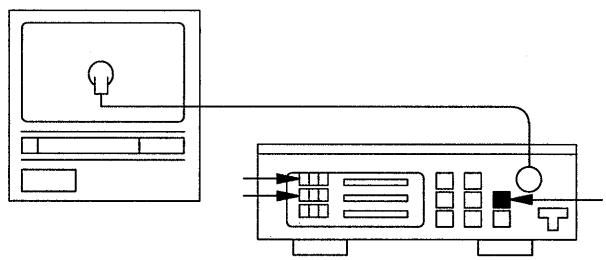

Spectrum Analyzer

Reference Notes:

1. Operate the unit more than 20 minutes.
2. Face the unit to east. Degauss the CRT using Degaussing Coil.
3. Input the White Raster (APL 100%).
4. Set the color analyzer to the CHROMA mode and after zero point calibration, bring the optical receptor to the center on the tube surface (CRT).
5. Enter the Service Mode. then Press No. 9 button on the Remote Control Unit.
6. Press Red button for Red adjustment. Press Blue button for Blue adjustment.
7. In each color mode, Press CH UP/DOWN button to adjust the values of color.
8. Adjusting Red and Blue color so that the tempreture becomes 8000K-10MPCD (x : 300 / y : 290) ±4%.
9. At this time, Re-check that Holizontal line is white. If not, Re-adjust Cut-off Adjustment until the Holizontal Line becomes pure white.
10. Turn off and on again to return to normal mode. Receive APL 100% white signal and Check Chroma temperatures become 8000K-10MPCD (x : 300 / y : 290) ±4%.

Note: Confirm that Cut Off Adj. is correct after this adjustment, and attempt Cut Off Adj. if needed.

BLOCK DIAGRAM

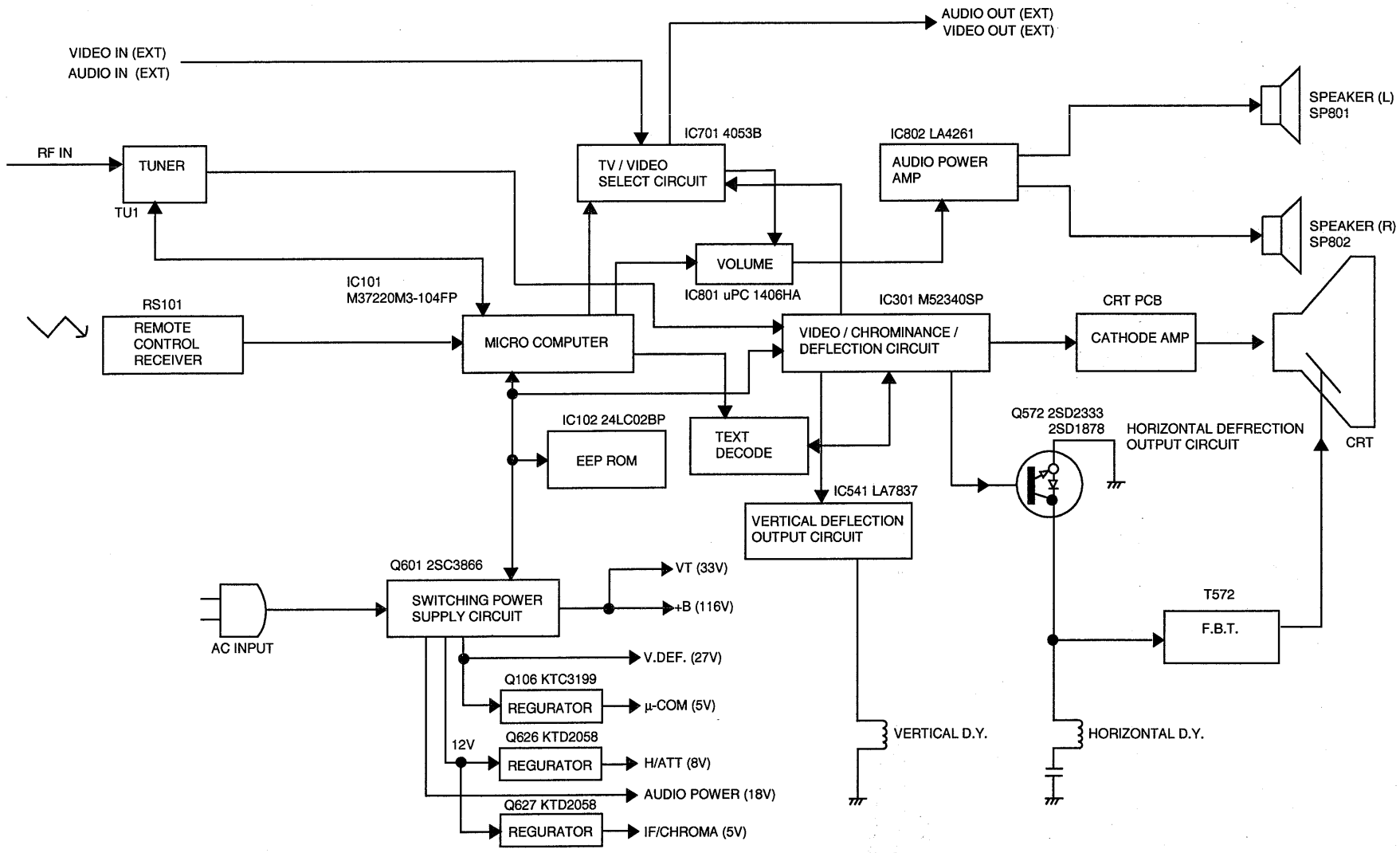

SCHEMATIC DIAGRAMS / CBA'S AND TEST POINTS

Standard Notes

Warning

Critical components having special safety characteristics are identified witha ⚠ by the Ref. No. in the parts list and enclosed within a broken line * (where several critical components are grouped in one area) along with the safety symbol ⚠ on the schematics or exploded views.

Use of substitute replacement parts which do not have the same specified safety characteristics may create shock, fire, or other hazards.

Under no circumstances should the original design be modified or altered without written permission from Company. Company assumes no liability, express or implied, arising out of any unauthorized modification of design. Servicer assumes all liability.

General Note:
"CBA" is an abbreviation for "Circuit Board Assembly".

Notes:

① Do not use the part number shown on these drawings for ordering. The correct part number is shown in the parts list, and may be slightly different or amended since these drawings were prepared.

② All resistance values are indicated in ohms ($K=10^3$, $M=10^6$).

③ Resistor wattages are 1/5W or 1/6W unless otherwise specified.

④ All capacitance values are indicated in μF ($P=10^{-6}$μF).

Warning: To prevent electric shock and fire hazard. disconnect main plug before fuse replacement and replace only with marked. (Fuse : T4AL 250V/T4AH 250V)

VOLTAGE CHART

(Unit: Volt)

Pin No.	IC101	Pin No.	IC101	Pin No.	IC301	Pin No.	IC371
1	3.9	39	0.0	34	1.0	1	1.8
2	4.1	40	0.0	35	3.0	2	1.8
3	0.0	41	0.0	36	2.2	3	8.0
4	0.03	42	0.0	37	0.0	4	4.2
5	3.0	**Pin No.**	IC301	38	2.4	5	0.01
6	0.03	1	4.0	39	3.3	6	0.0
7	8.0	2	0.0	40	6.6	7	3.8
8	0.0	3	8.3	41	2.3	8	4.2
9	2.3	4	0.4	42	1.5	9	2.2
10	4.4	5	0.0	43	2.3	10	2.3
11	0.0	6	1.4	44	2.9	11	4.1
12	0.02	7	1.4	45	2.9	12	5.0
13	4.7	8	5.0	46	2.6	13	5.0
14	0.0	9	8.3	47	8.4	14	4.2
15	0.0	10	1.4	48	3.0	15	0.6
16	4.0	11	4.3	49	4.1	16	0.0
17	2.6	12	0.6	50	4.1	**Pin No.**	IC302
18	0.0	13	1.3	51	3.0	1	4.0
19	1.6	14	4.4	52	5.2	2	-----
20	2.1	15	4.2	**Pin No.**	IC701	3	0.0
21	0.0	16	5.2	1	0.1	4	-----
22	4.8	17	0.0	2	2.9	5	0.6
23	0.0	18	5.9	3	0.1	6	-----
24	0.0	19	8.4	4	0.1	7	-----
25	4.3	20	8.4	5	0.1	8	-----
26	0.0	21	2.8	6	0.0	9	4.7
27	4.7	22	2.7	7	0.0	10	0.0
28	4.7	23	5.0	8	0.0	11	2.6
29	4.7	24	5.0	9	0.0	12	2.6
30	4.7	25	2.3	10	0.0	13	3.0
31	4.7	26	3.4	11	3.6	14	0.5
32	0.0	27	2.3	12	4.8	15	-----
33	0.0	28	7.5	13	4.8	16	0.5
34	0.0	29	2.3	14	3.5		
35	0.0	30	1.7	15	2.9		
36	0.0	31	0.0	16	8.3		
37	4.3	32	3.1				
38	4.3	33	2.4				

Input: PAL Color Bar Signal (with 1KHz Audio Signal)

Receiving Ch.: E4 ch (62.25MHz)

Preset Mode: Press Picture Select button on the remote control unit, then press the number "1" button.

Brightness--- Center
Color--- Center
Contrast--- Approx 70%

Pin No.	IC541
1	8.9
2	5.5
3	4.5
4	4.6
5	0.03
6	4.3
7	4.4
8	25.0
9	1.8
10	1.8
11	0.0
12	0.0
13	15.0
14	25.0
Pin No.	IC802
1	9.1
2	0.2
3	19.4
4	0.0
5	0.0
6	0.6
7	9.9
8	0.0
9	19.1
10	18

TR No.	B	C	E
Q31	1.14	7.0	0.4
Q33	0.62	0.04	0.0
Q81	8.80	0.0	9.0
Q82	8.75	0.0	9.0
Q83	8.80	0.0	9.0
Q84	0.64	0.04	0.0
Q101	0.0	3.8	0.0
Q103	0.0	3.66	0.0
Q104	26.4	6.90	27.0
Q105	5.46	6.70	4.74
Q106	0.67	0.0	0.0
Q107	0.0	4.32	0.0
Q301	0.6	0.03	0.0
Q302	0.02	0.67	0.0
Q304	2.5	0.0	3.09
Q621	7.48	4.60	0.69
Q622	0.10	112.0	4.43
Q623	0.57	0.09	0.0
Q624	0.63	0.06	0.0
Q625	0.06	9.33	0.0
Q626	9.84	13.50	9.20
Q627	5.52	13.50	9.20
Q628	0.08	1.90	0.0
Q701	4.17	8.39	3.60
Q702	4.0	0.0	4.62
Q703	4.65	8.37	3.90
Q704	2.30	0.0	2.98
Q705	1.19	0	1.87
Q706	0.60	0.02	0.0
Q541	0.55	0.03	0.0
Q573	0.0	4.67	0.0
Q574	27.40	0.10	0.0
Q601	112.0	0.21	-0.51
Q602	0.56	0.07	0.0
Q603	-8.40	0.80	0.0

Main Schematic Diagram

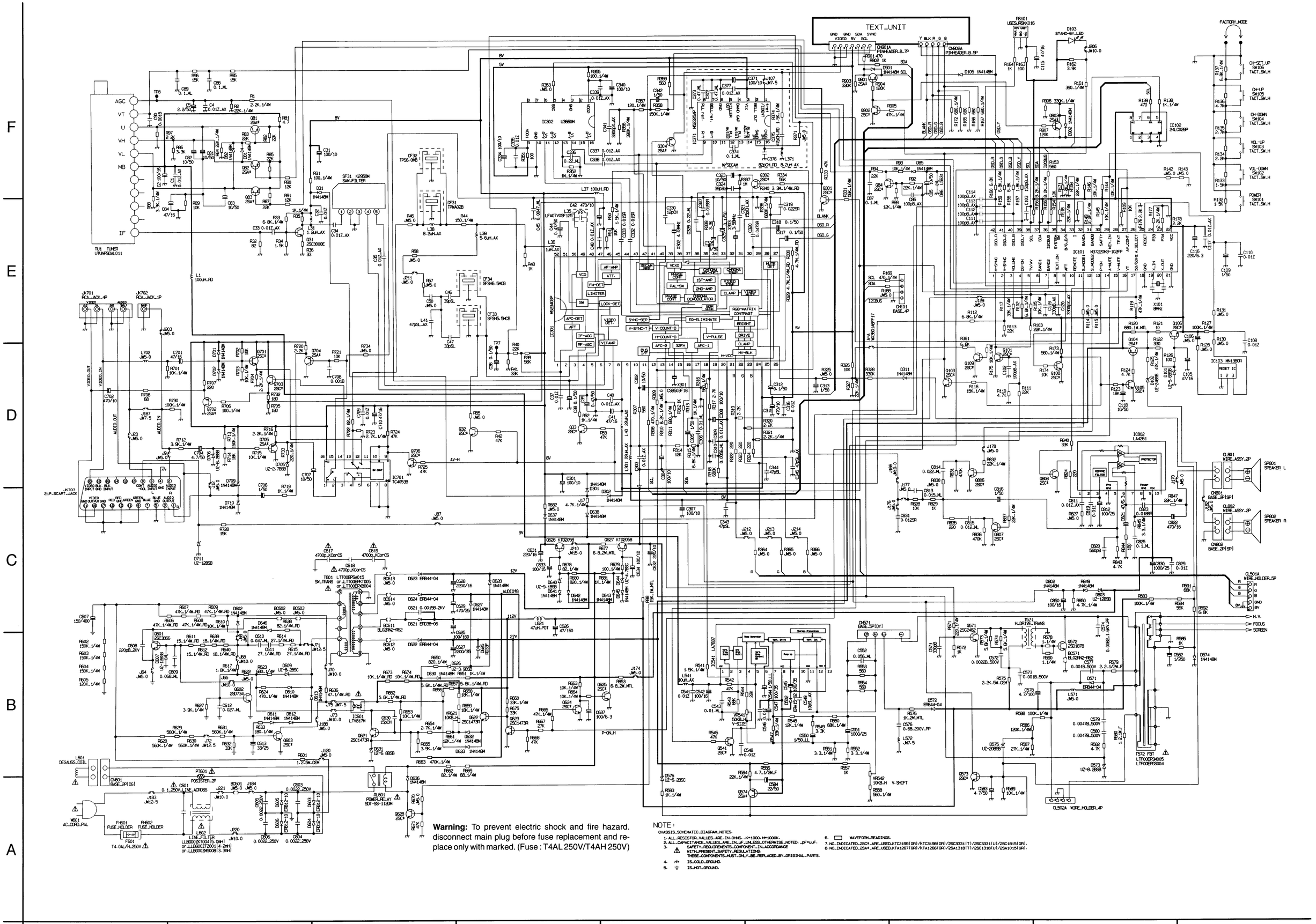

Warning: To prevent electric shock and fire hazard. disconnect main plug before fuse replacement and replace only with marked. (Fuse : T4AL 250V/T4AH 250V)

NOTE :

CHASSIS_SCHEMATIC_DIAGRAM_NOTES:

1. ALL_RESISTOR_VALUES_ARE_IN_OHMS._K=1000._M=1000K.
2. ALL_CAPACITANCE_VALUES_ARE_IN_uF_UNLESS_OTHERWISE_NOTED._pF=uuF.
3. ⚠ SAFETY_REQUIREMENTS_COMPONENT_IN_ACCORDANCE WITH_PRESENT_SAFETY_REGULATIONS. THESE_COMPONENTS_MUST_ONLY_BE_REPLACED_BY_ORIGINAL_PARTS.
4. ⏚ IS_COLD_GROUND.
5. ⏚ IS_HOT_GROUND.
6. ▭ WAVEFORM_READINGS.
7. NO_INDICATED_2SC#_ARE_USED.KTC3198(GR)/KTC3198(GR)/2SC3331(T)/2SC3331(U)/2SC1815(GR).
8. NO_INDICATED_2SA#_ARE_USED.KTA1267(GR)/KTA1266(GR)/2SA1318(T)/2SC1318(U)/2SA1015(GR).

CRT Schematic Diagram

NOTES:

CHASSIS_SCHEMATIC_DIAGRAM_NOTES.

1. ALL_RESISTOR_VALUES_ARE_IN_OHMS. _K=1000. M=1000K.
2. ALL_CAPACITANCE_VALUES_ARE_IN_uF_UNLESS_OTHERWISE_NOTED. _pF=uuF.
3. ⏚ IS_COLD_GROUND.
4. NO_INDICATED_2SC*_ARE_USED_KTC3199(GR)/KTC3198(GR)/2SC3331(T)/2SC3331(U)/2SC1815(GR).
5. NO_INDICATED_2SA*_ARE_USED_KTA1267(GR)/KTA1266(GR)/2SA1318(T)/2SA1318(U)/2SA1015(GR).
6. ⚠ SAFETY_REQUIREMENTS_COMPONENT_IN_ACCORDANCE_WITH_PRESENT_ SAFETY_REGULATIONS. THESE_COMPONENTS_MUST_ONLY_BE_REPLACED_BY_ORIGINAL_PARTS.

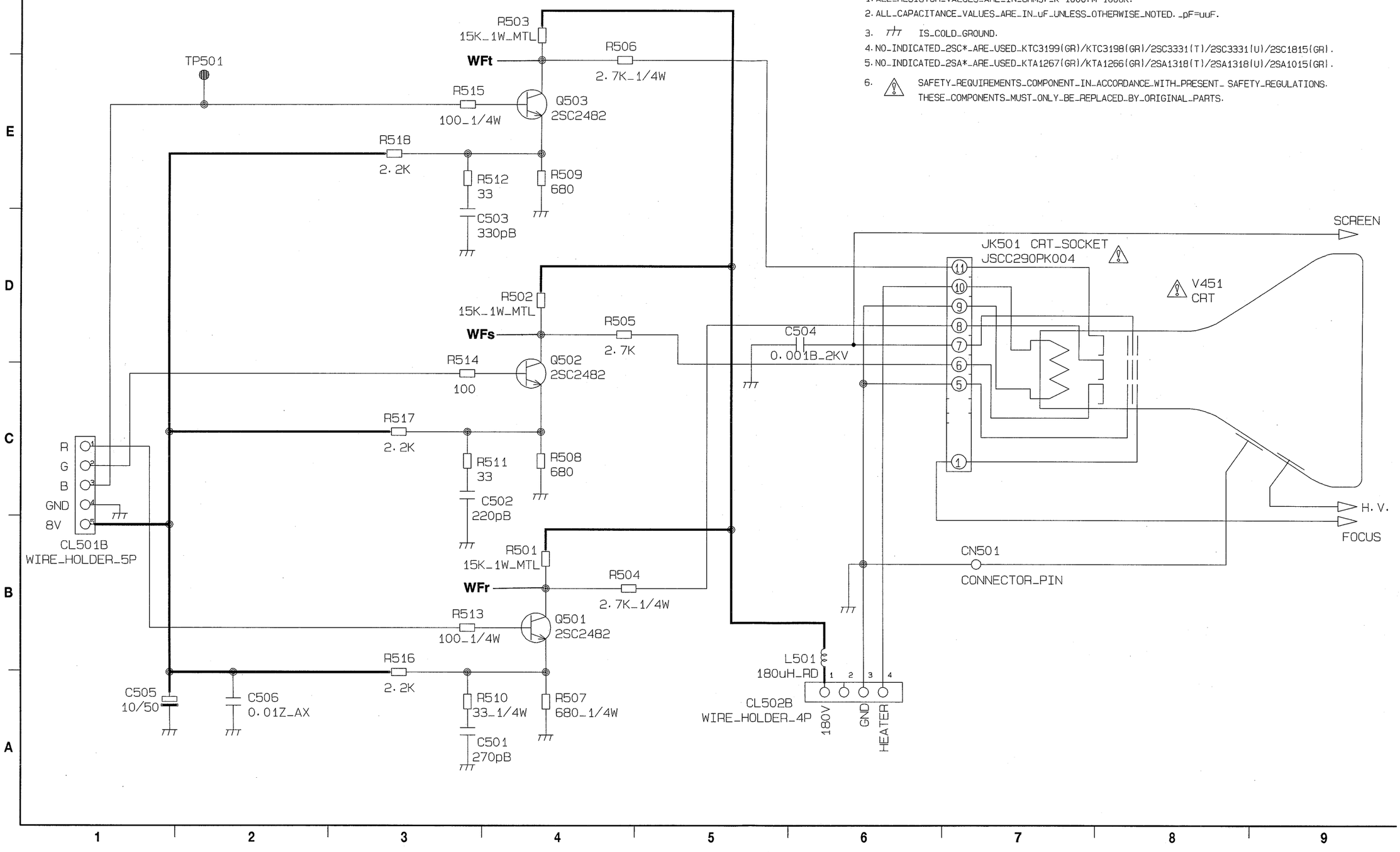

(L9530SC-CRT)

Teletext Schematic Diagram

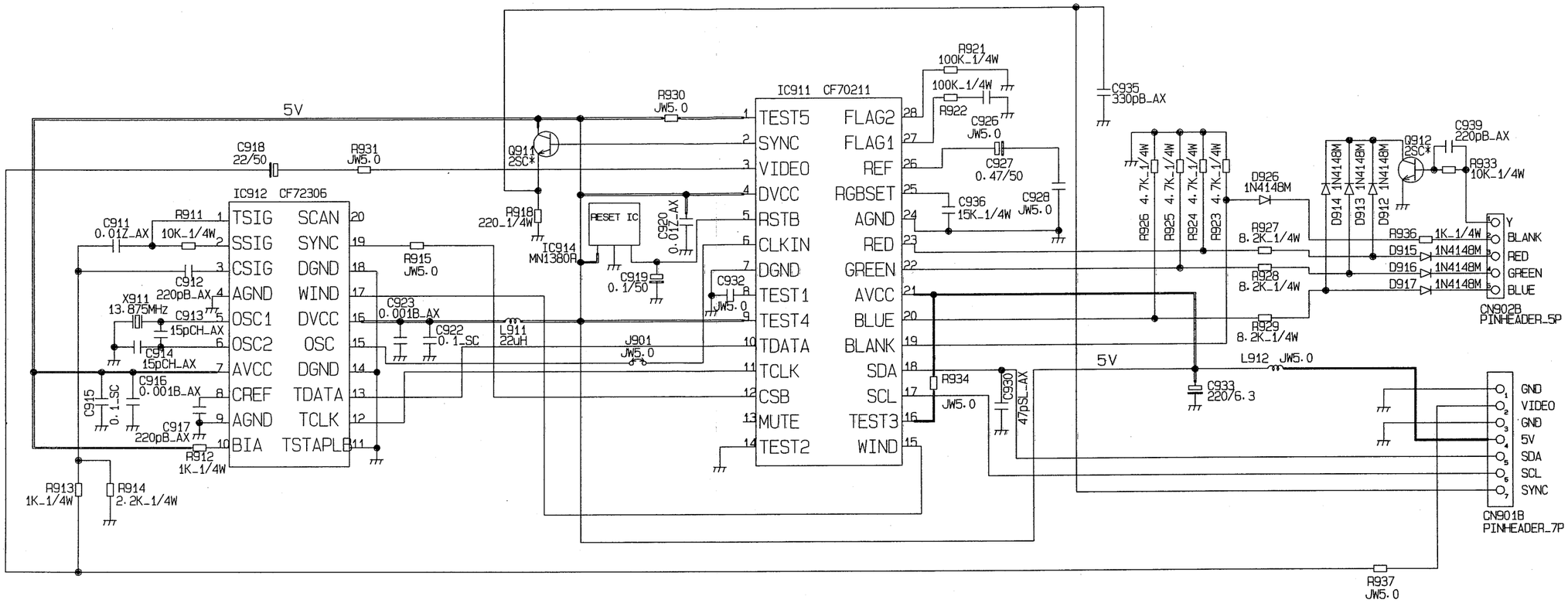

NOTES:

CHASSIS_SCHEMATIC_DIAGRAM_NOTES.

1. ALL_RESISTOR_VALUES_ARE_IN_OHMS. _K=1000. M=1000K.
2. ALL_CAPACITANCE_VALUES_ARE_IN_uF_UNLESS_OTHERWISE_NOTED. _pF=uuF.
3. ⏚ IS_COLD_GROUND.
4. NO_INDICATED_2SC*_ARE_USED_KTC3199(GR)/KTC3198(GR)/2SC3331(T)/2SC3331(U)/2SC1815(GR).
5. NO_INDICATED_2SA*_ARE_USED_KTA1267(GR)/KTA1266(GR)/2SA1318(T)/2SA1318(U)/2SA1015(GR).

Main CBA (Top View)

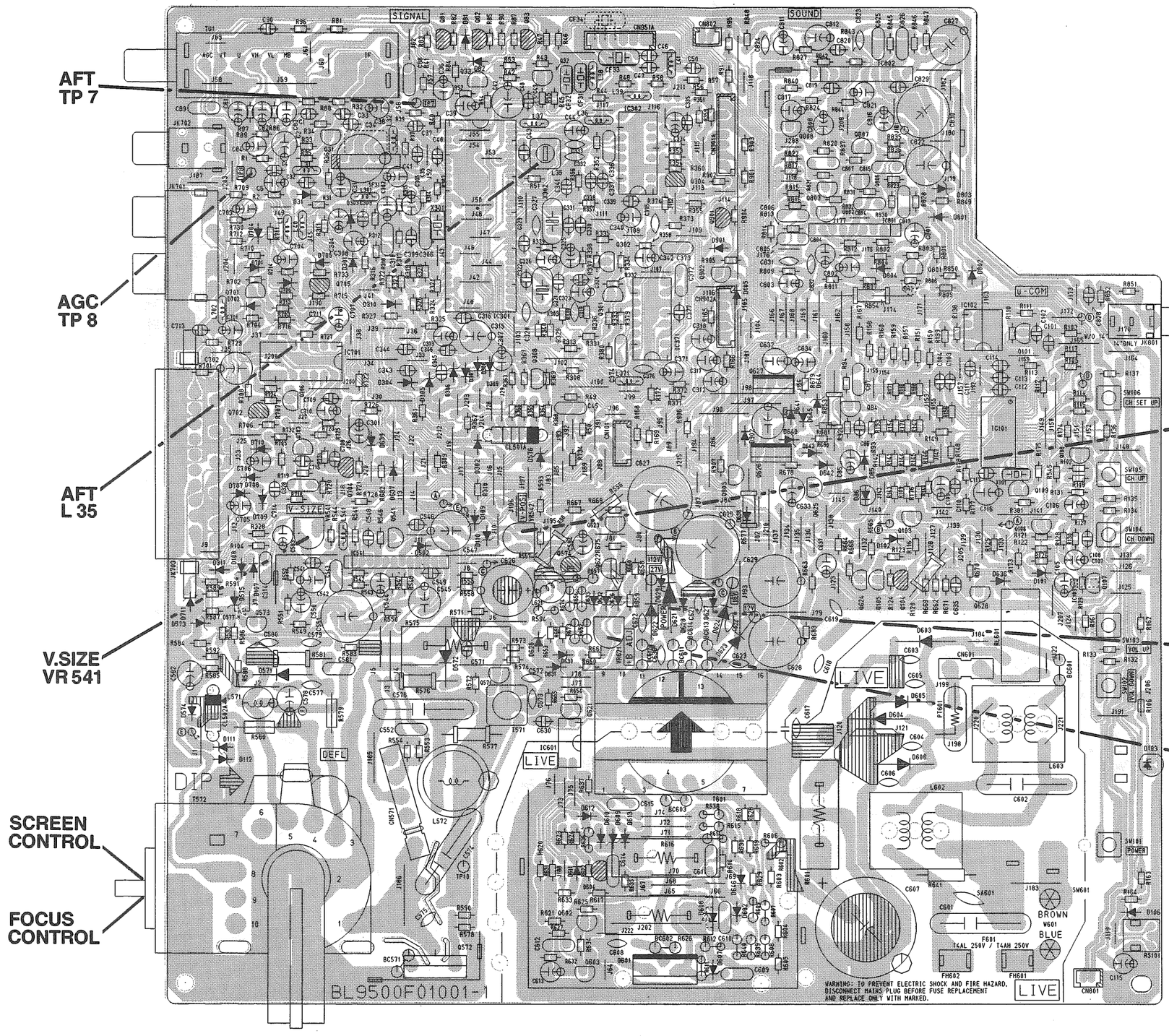

(BL9500F01001-1)

Main CBA (Bottom View)

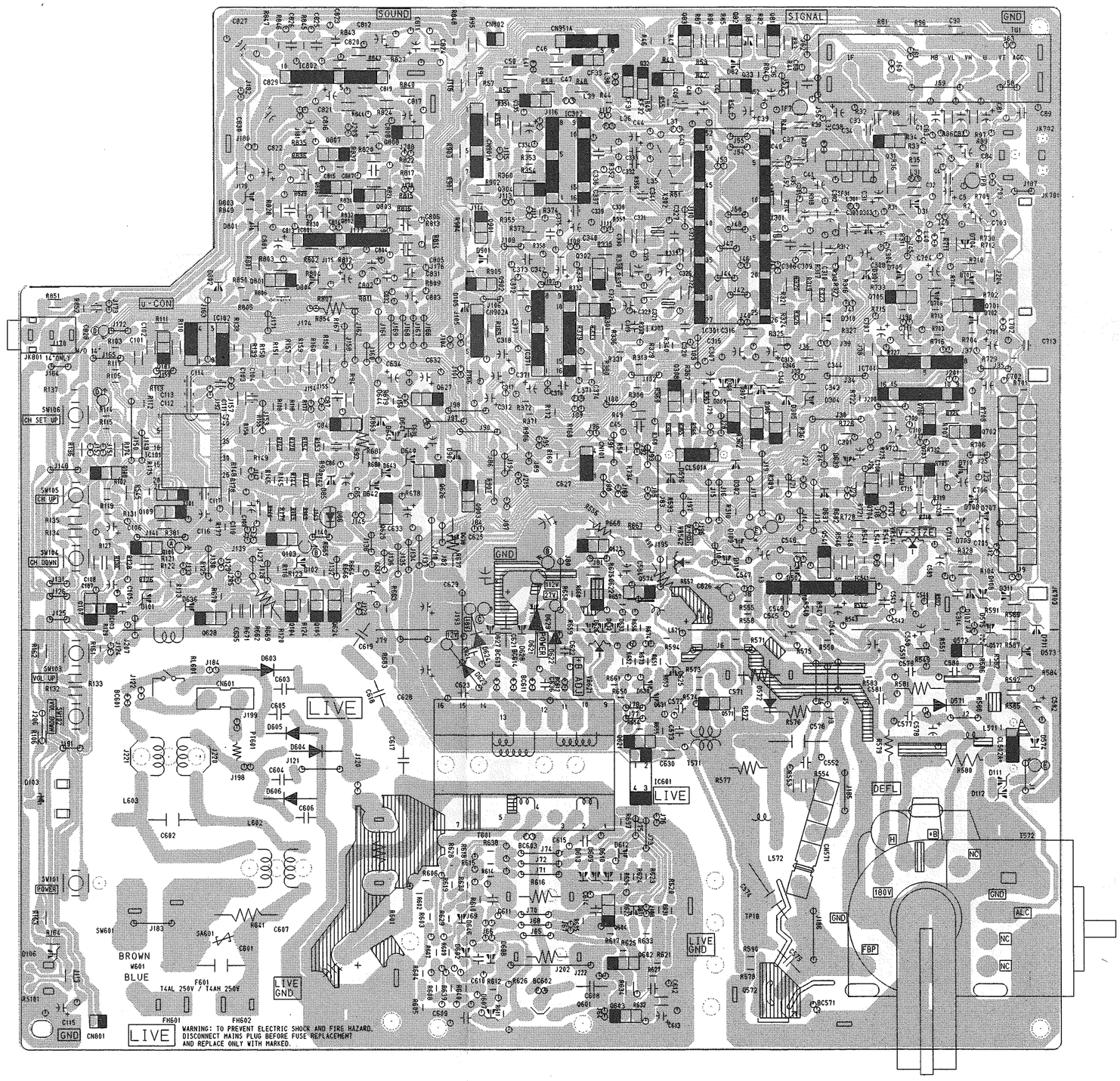

(BL9500F01001-1)

CRT CBA (Top View)

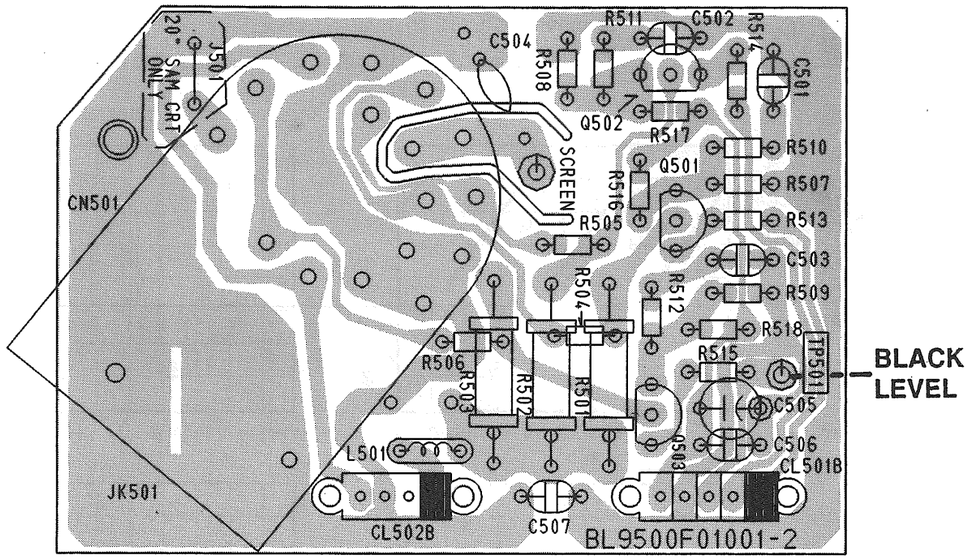

CRT CBA (Bottom View)

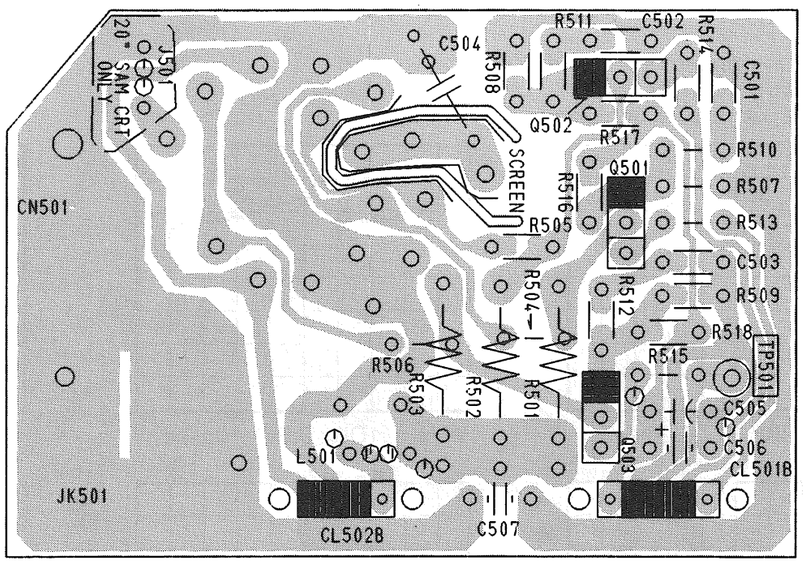

(BL9500F01001-2)

Teletext CBA (Top View)

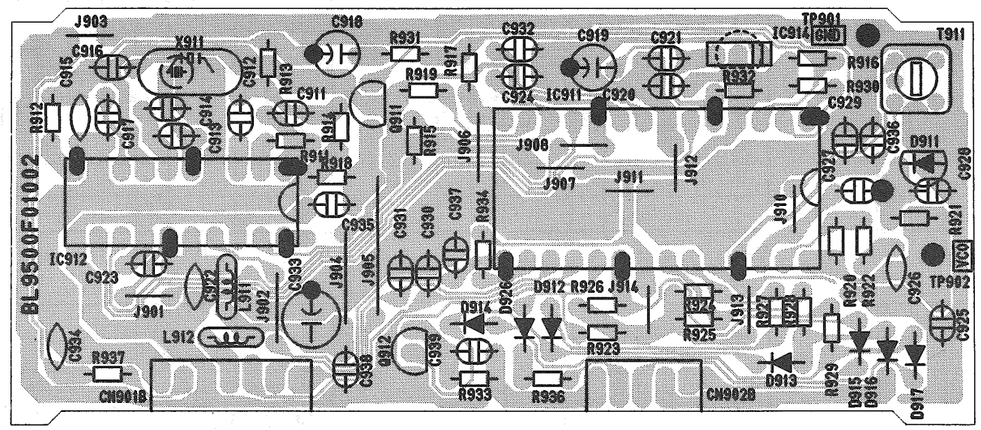

Teletext CBA (Bottom View)

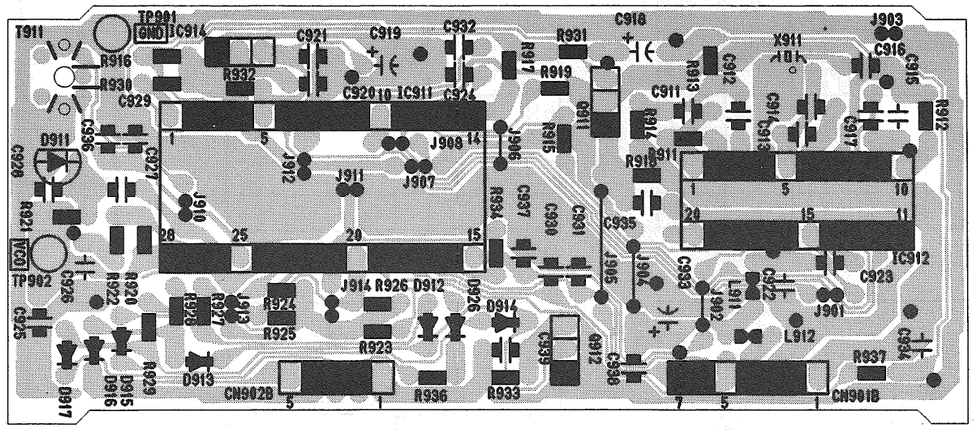

(BL9500F01002)

WAVEFORMS

Input: PAL Color Bar Signal (with 1KHz Audio Signal)
Receiving Ch.: E2 ch (62.25MHz)
Preset Mode: Press Picture Select button on the remote control unit, then press the number "1" button.
(Brightness---Center Color---Center Contrast---Approx 70%)

WFa ~ WFt = Waveforms to be observed at Waveform check points. (Shown in Schematic Diagram.)

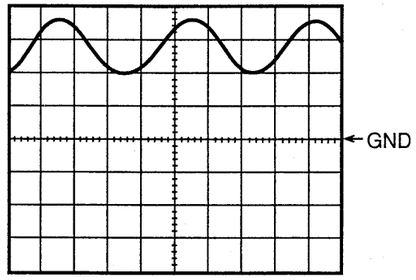

WFa 1DIV: 1V 0.2msec

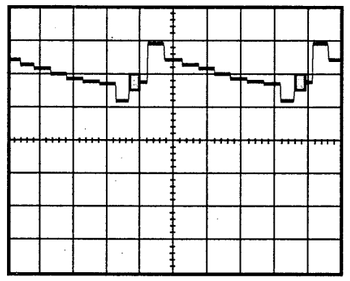

WFe 1DIV: 0.5V 10µsec

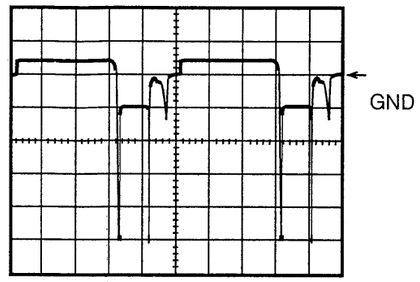

WFi 1DIV: 2V 10µsec

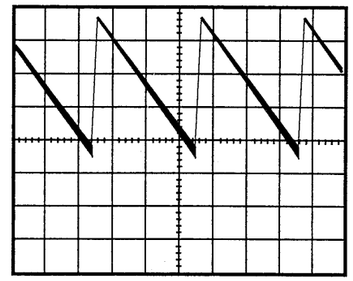

WFm 1DIV: 0.5V 5msec

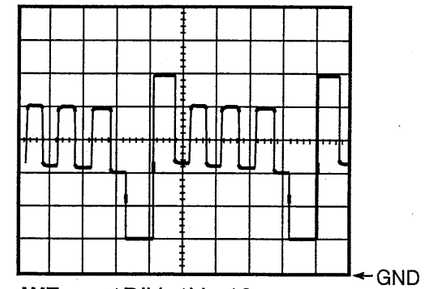

WFq 1DIV: 1V 10µsec

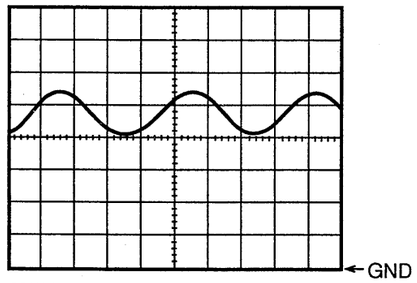

WFb 1DIV: 1V 0.2msec

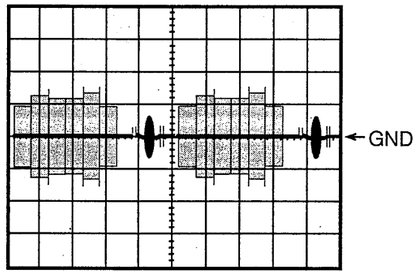

WFf 1DIV: 0.2V 10µsec

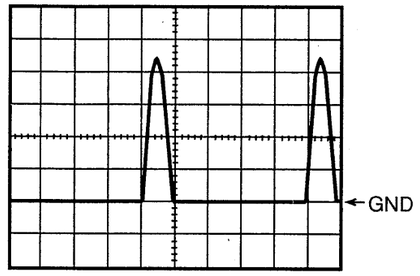

WFj 1DIV: 250V 10µsec

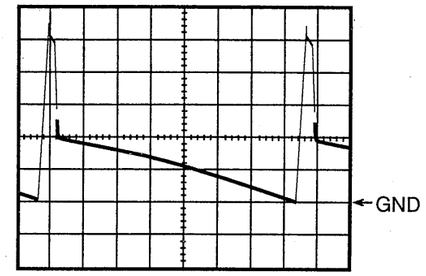

WFn 1DIV: 10V 2msec

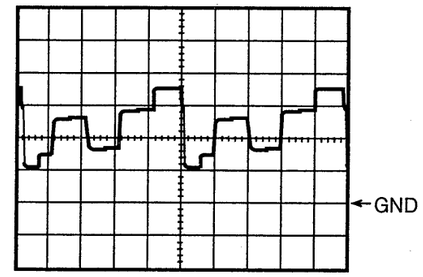

WFr 1DIV: 50V 10µsec

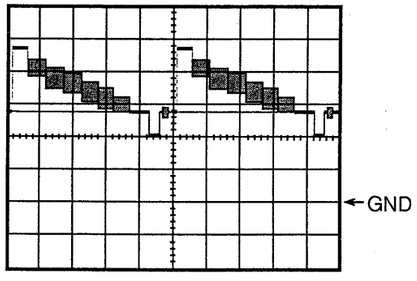

WFc 1DIV: 1V 10µsec

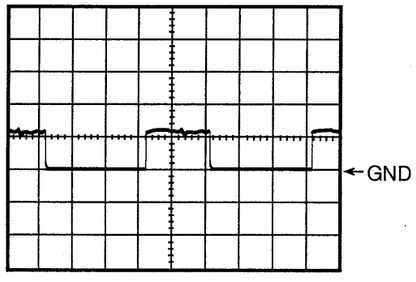

WFg 1DIV: 0.5V 10µsec

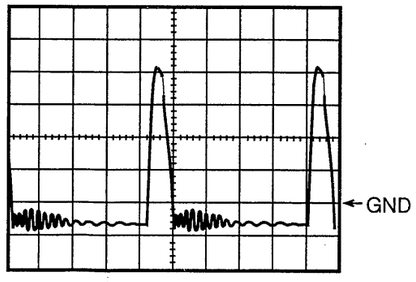

WFk 1DIV: 5V 10µsec

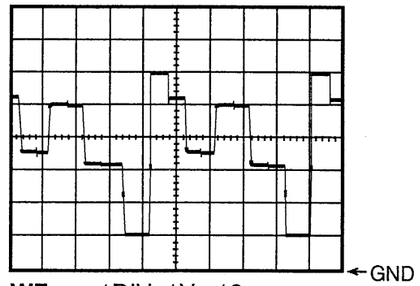

WFo 1DIV: 1V 10µsec

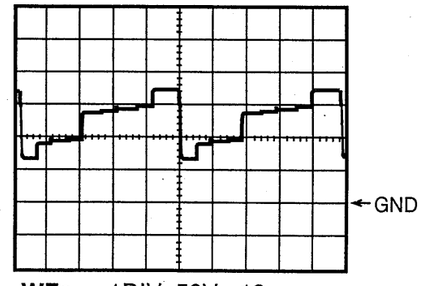

WFs 1DIV: 50V 10µsec

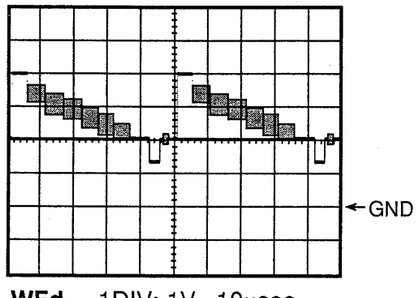

WFd 1DIV: 1V 10µsec

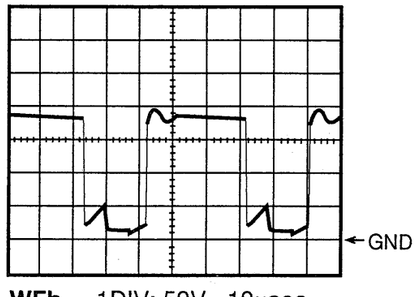

WFh 1DIV: 50V 10µsec

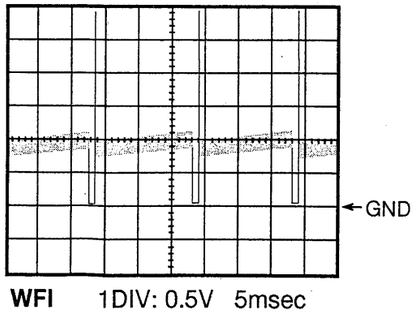

WFl 1DIV: 0.5V 5msec

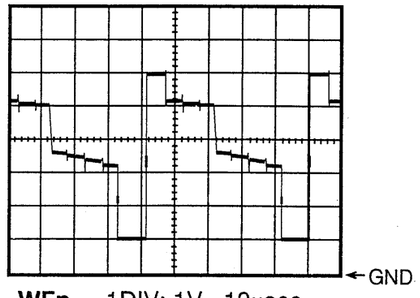

WFp 1DIV: 1V 10µsec

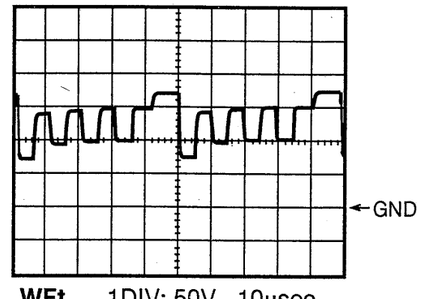

WFt 1DIV: 50V 10µsec

WIRING DIAGRAM

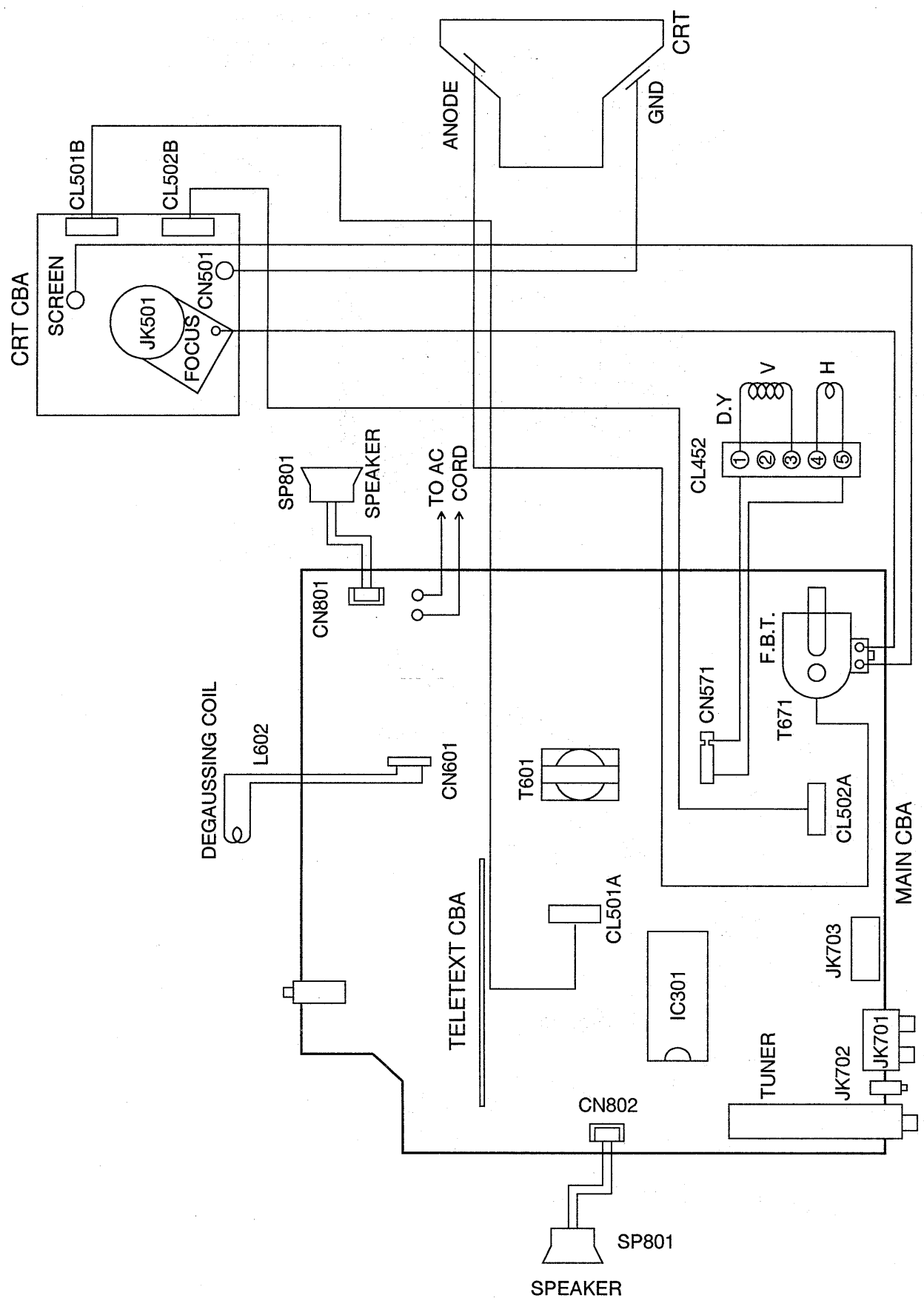

CABINET EXPLODED VIEW

*Marked parts see the Electrical Parts List

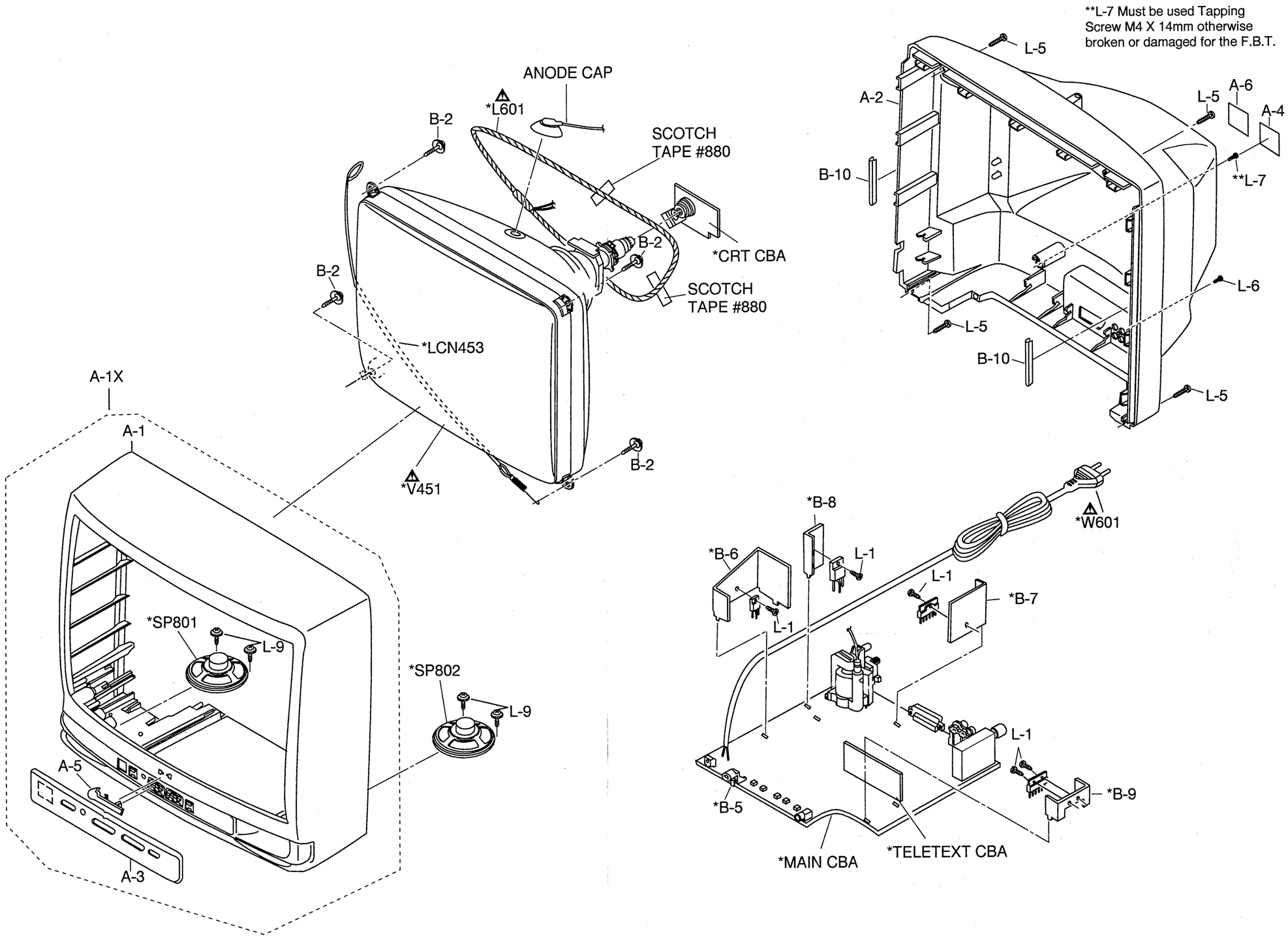

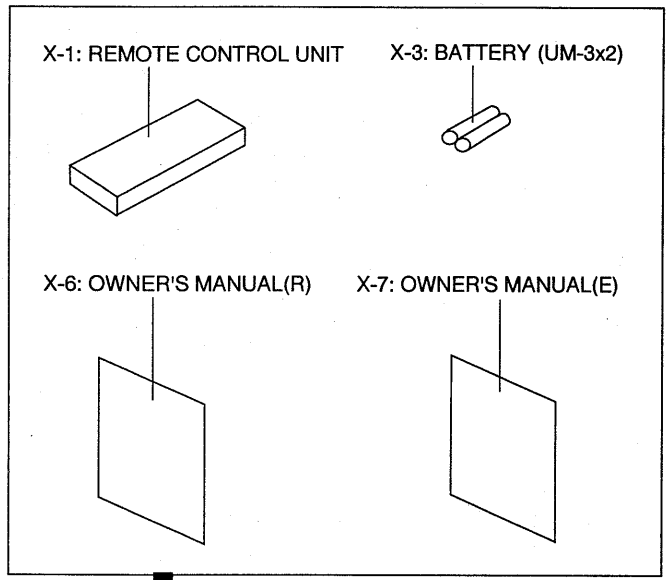
X-1: REMOTE CONTROL UNIT
X-3: BATTERY (UM-3x2)
X-6: OWNER'S MANUAL(R)
X-7: OWNER'S MANUAL(E)

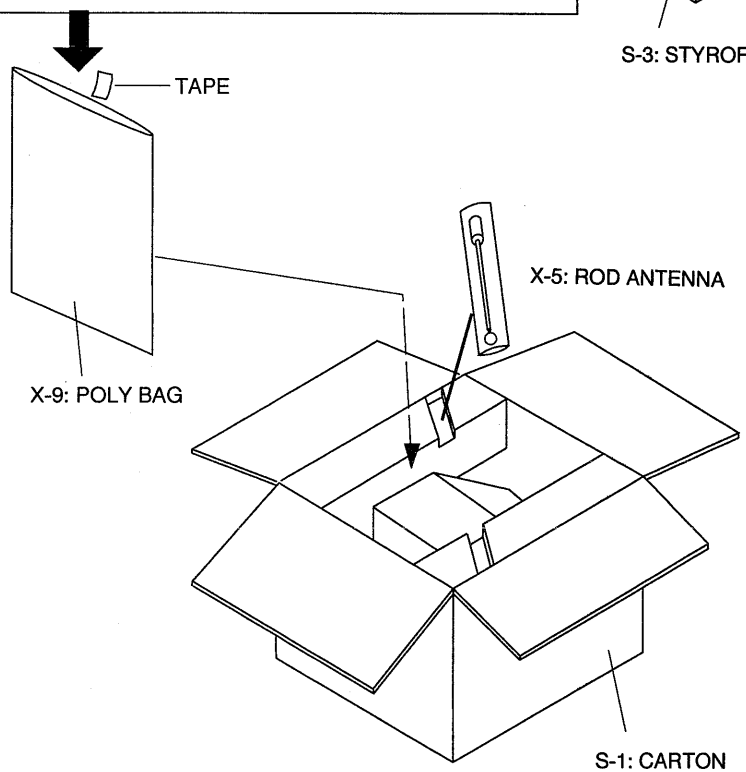
TAPE
X-9: POLY BAG
X-5: ROD ANTENNA
S-1: CARTON

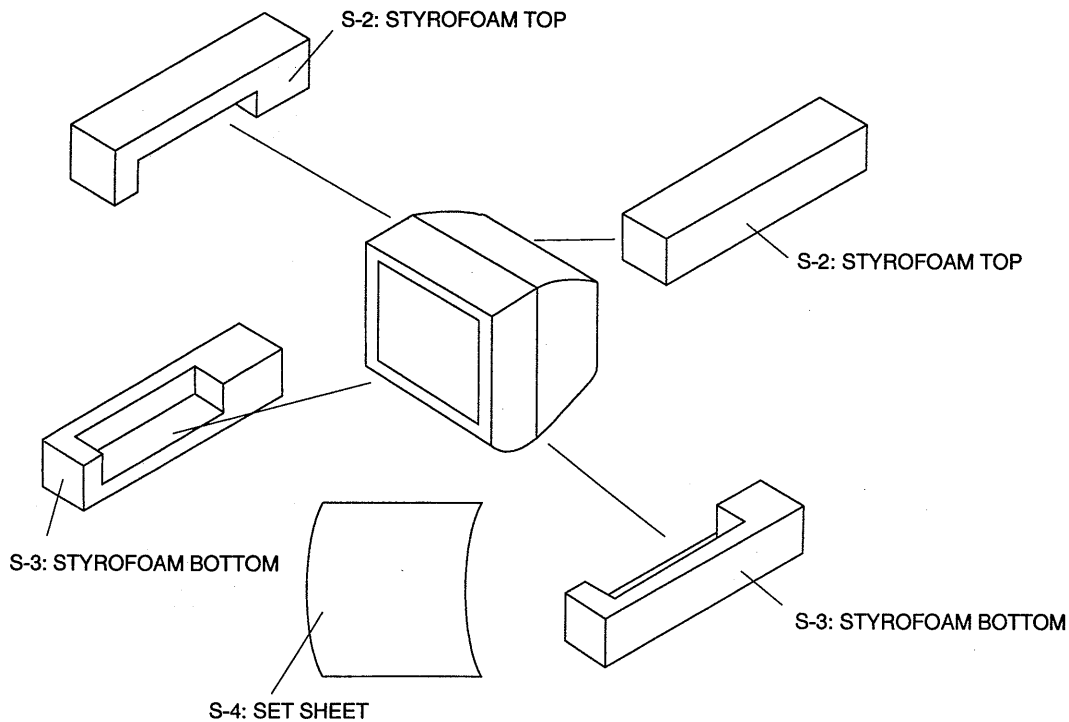
S-2: STYROFOAM TOP
S-2: STYROFOAM TOP
S-3: STYROFOAM BOTTOM
S-3: STYROFOAM BOTTOM
S-4: SET SHEET

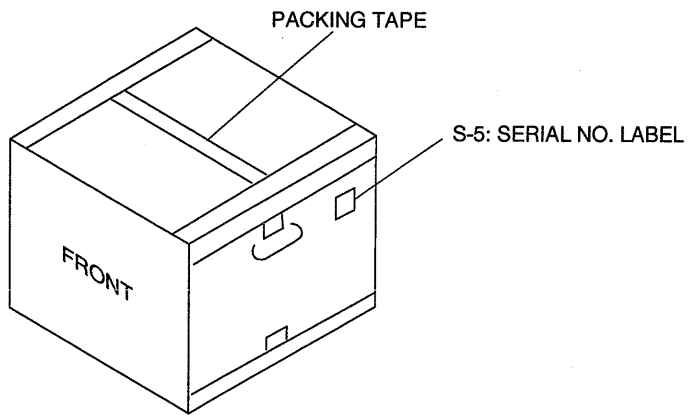
PACKING TAPE
S-5: SERIAL NO. LABEL
FRONT

MECHANICAL PARTS LIST

PRODUCT SAFETY NOTE: Products marked with a ⚠ have special characteristics important to safety. Before replacing any of these components, read carefully the product safety notice in this service manual. Don't degrade the safety of the product through improper servicing.

Ref. No.	Description	Part No.
A-1X	FRONT CABINET ASSEMBLY	0EM200681
A-1	FRONT CABINET	0EM000242
A-3	CONTROL PLATE	0EM301019
A-5	BRAND BADGE	0EM400975
A-2X	REAR CABINET ASSEMBLY	0EM200682
A-2	REAR CABINET	0EM000244
A-4 ⚠	RATING LABEL	0EM403490
A-6	MARK OF CONFORMITY LABEL	0EM402171
B-1	TENSION SPRING B0080B0:EM40808	26WH006
B-2	CRT MOUNTING SCREW B0030U1	8A00083
B-6	CLOTH 190X15XT0.5	TS7623
L-5	SCREW P-TIGHT 4X16 BIND HEAD+	GBMP4160
L-6	SCREW P-TIGHT 3X10 BIND HEAD+	GBKP3100
L-7	SCREW P-TIGHT 4X12 BIND HEAD+	GBKP4120
L-9	SCREW P-TIGHT 3X8 WASHER +	GCMP3080
S-1	CARTON	0EM403491
S-2	STYROFOAM TOP	0EM000253
S-3	STYROFOAM BOTTOM	0EM000254
S-4	SET SHEET	0EM401154
S-5	SERIAL NO. LABEL B0034B2:EM40416	24LH033
X-1	REMOCON UNIT RRS1001-4601R	UREMT32SR025
X-3	DRY BATTERY R6M	XB0M451GW003
X-5	ROD ANTENNA 2 SEC.PALW/O COO	0EMN00542
X-6 ⚠	OWNER'S MANUAL :RUSSIAN	0EMN01175
X-7 ⚠	OWNER'S MANUAL :ENGLISH	0EMN01176
X-9	POLY BAG 200X300X0.025	Z220300

ELECTRICAL PARTS LIST

PRODUCT SAFETY NOTE: Products marked with a ⚠ have special characteristics important to safety. Before replacing any of these components, read carefully the product safety notice in this service manual. Don't degrade the safety of the product through improper servicing.

NOTE: Parts that not assigned part numbers (----------) are not available.

Tolerance of Capacitors and Resistors are noted with the following symbols.

C.....±0.25%	D.....±0.5%	F.....±1%
G.....±2%	J.....±5%	K.....±10%
M.....±20%	N.....±30%	Z.....+80/-20%

Main (MMA-190A) CBA

Ref. No.	Description	Part No.
	Main (MMA-190A) CBA Consists of the following:	0ESA02254
	Main CBA	————
	CRT CBA	————

Main CBA

Ref. No.	Description	Part No.
	Main CBA Consists of the following:	————
	CAPACITORS	
C 1	CERAMIC CAP.(AX) F Z 0.01μF/25V	CDA1EZT0F103
C 2	ELECTROLYTIC CAP. 100μF/16V M	CE1CMASDL101
C 4	CERAMIC CAP.(AX) F Z 0.01μF/25V	CDA1EZT0F103
C 5	ELECTROLYTIC CAP. 2.2μF/50V M	CE1JMASDL2R2
C 31	ELECTROLYTIC CAP. 100μF/10V M	CE1AMASDL101
C 32	CERAMIC CAP.(AX) F Z 0.01μF/25V or	CDA1EZT0F103
	CHIP CERAMIC CAP. F Z 0.01μF/50V	CHE1JZB0F103
C 33	CERAMIC CAP.(AX) F Z 0.01μF/25V	CDA1EZT0F103
C 34	CERAMIC CAP.(AX) F Z 0.01μF/25V	CDA1EZT0F103
C 35	CERAMIC CAP.(AX) F Z 0.01μF/25V	CDA1EZT0F103
C 36	ELECTROLYTIC CAP. 0.1μF/50V M	CE1JMASDL0R1
C 37	CERAMIC CAP.(AX) F Z 0.01μF/25V or	CDA1EZT0F103
	CHIP CERAMIC CAP. F Z 0.01μF/50V	CHE1JZB0F103
C 38	ELECTROLYTIC CAP. 0.1μF/50V M	CE1JMASDL0R1
C 39	ELECTROLYTIC CAP. 0.47μF/50V M	CE1JMASDLR47
C 40	CERAMIC CAP.(AX) F Z 0.01μF/25V	CDA1EZT0F103
C 41	ELECTROLYTIC CAP. 47μF/16V M	CE1CMASDL470
C 42	ELECTROLYTIC CAP. 470μF/10V M	CE1AMASDL471
C 44	ELECTROLYTIC CAP. 0.47μF/50V M	CE1JMASDLR47
C 45	MYLAR CAP. 0.0047μF/50V J or	CMA1JJS00472
	MYLAR CAP. 0.0047μF/50V K	2250472S
C 46	CERAMIC CAP.(AX) SL J 39pF/50V or	CCA1JJTSL390
	CHIP CERAMIC CAP. SL J 39pF/50V	CHE1JJBSL390
C 47	CERAMIC CAP.(AX) SL J 33pF/50V or	CCA1JJTSL330
	CHIP CERAMIC CAP. SL J 33pF/50V	CHE1JJBSL330
C 48	CERAMIC CAP.(AX) F Z 0.01μF/25V	CDA1EZT0F103
C 50	PCB JUMPER D0.6-P5.0	JW5.0T
C 81	ELECTROLYTIC CAP. 10μF/50V M	CE1JMASDL100
C 82	ELECTROLYTIC CAP. 10μF/50V M	CE1JMASDL100
C 83	ELECTROLYTIC CAP. 10μF/50V M	CE1JMASDL100
C 84	ELECTROLYTIC CAP. 47μF/16V M	CE1CMASDL470
C 85	ELECTROLYTIC CAP. 10μF/50V M	CE1JMASDL100
C 86	CERAMIC CAP.(AX) B K 100pF/50V	CCA1JKT0B101
C 87	MYLAR CAP. 0.1μF/50V K	2250104S
C 88	MYLAR CAP. 0.1μF/50V K	2250104S
C 89	MYLAR CAP. 0.1μF/50V K	2250104S
C 90	CERAMIC CAP.(AX) B K 1000pF/50V or	CDA1JKT0B102
	CHIP CERAMIC CAP. B K 1000pF/50V	CHE1JKB0B102
C 102	CERAMIC CAP.(AX) B K 100pF/50V	CCA1JKT0B101
C 103	CERAMIC CAP.(AX) B K 150pF/50V	CCA1JKT0B151
C 105	ELECTROLYTIC CAP. 47μF/16V M	CE1CMASDL470
C 106	PCB JUMPER D0.6-P5.0	JW5.0T
C 108	CERAMIC CAP.(AX) F Z 0.01μF/25V or	CDA1EZT0F103
	CHIP CERAMIC CAP. F Z 0.01μF/50V	CHE1JZB0F103
C 109	ELECTROLYTIC CAP. 1μF/50V M	CE1JMASDL010
C 110	CERAMIC CAP.(AX) F Z 0.01μF/25V or	CDA1EZT0F103
	CHIP CERAMIC CAP. F Z 0.01μF/50V	CHE1JZB0F103
C 111	CERAMIC CAP.(AX) B K 100pF/50V	CCA1JKT0B101
C 112	CERAMIC CAP.(AX) B K 100pF/50V	CCA1JKT0B101
C 113	CERAMIC CAP.(AX) B K 100pF/50V	CCA1JKT0B101
C 114	CERAMIC CAP.(AX) B K 100pF/50V	CCA1JKT0B101
C 115	ELECTROLYTIC CAP. 47μF/16V M	CE1CMASDL470
C 116	ELECTROLYTIC CAP. 220μF/6.3V M	CE0KMASDL221
C 117	CERAMIC CAP.(AX) F Z 0.01μF/25V	CDA1EZT0F103
C 118	ELECTROLYTIC CAP. 10μF/50V M	CE1JMZPDL100
C 119	CERAMIC CAP.(AX) B K 330pF/50V	CCA1JKP0B331
C 120	CERAMIC CAP.(AX) X K 3300pF/16V	CDA1CKP0X332
C 301	ELECTROLYTIC CAP. 100μF/10V M	CE1AMASDL101
C 302	ELECTROLYTIC CAP. 10μF/50V M	CE1JMASDL100
C 303	CERAMIC CAP.(AX) F Z 0.01μF/25V	CDA1EZT0F103
C 304	ELECTROLYTIC CAP. 100μF/10V M	CE1AMASDL101
C 305	ELECTROLYTIC CAP. 1μF/50V M	CE1JMASDL010
C 306	MYLAR CAP. 0.01μF/50V J or	CMA1JJS00103
	MYLAR CAP. 0.01μF/50V K	2250103S
C 307	ELECTROLYTIC CAP. 100μF/10V M	CE1AMASDL101
C 308	ELECTROLYTIC CAP. 100μF/10V M	CE1AMASDL101
C 309	CERAMIC CAP.(AX) F Z 0.01μF/25V	CDA1EZT0F103
C 310	MYLAR CAP. 0.0056μF/50V J or	CMA1JJS00562
	MYLAR CAP. 0.0056μF/50V K	2250562S
C 312	ELECTROLYTIC CAP. 0.1μF/50V M	CE1JMASDL0R1
C 313	ELECTROLYTIC CAP. 1μF/50V M	CE1JMASDL010
C 315	ELECTROLYTIC CAP. 470μF/10V M	CE1AMASDL471
C 316	CERAMIC CAP.(AX) F Z 0.01μF/25V or	CDA1EZT0F103
	CHIP CERAMIC CAP. F Z 0.01μF/50V	CHE1JZB0F103
C 317	ELECTROLYTIC CAP. 0.1μF/50V M	CE1JMASDL0R1
C 318	ELECTROLYTIC CAP. 0.1μF/50V M	CE1JMASDL0R1
C 319	SEMICONDUCTOR CAP. SR K 0.022μF/25V or	CDA1EKS0X223
	SEMICONDUCTOR CAP. SR K 0.022μF/25V	12Y2223S
C 320	SEMICONDUCTOR CAP. SR K 0.047μF/25V or	CDA1EKS0X473
	SEMICONDUCTOR CAP. SR K 0.047μF/25V	12Y2473S
C 321	CERAMIC CAP.(AX) CH J 15pF/50V	CCA1JJTCH150
C 323	ELECTROLYTIC CAP. 10μF/50V M	CE1JMASDL100
C 324	CERAMIC CAP.(AX) SL J 39pF/50V or	CCA1JJTSL390
	CHIP CERAMIC CAP. SL J 39pF/50V	CHE1JJBSL390
C 325	ELECTROLYTIC CAP. 0.1μF/50V M	CE1JMASDL0R1
C 326	ELECTROLYTIC CAP. 1μF/50V M	CE1JMASDL010
C 327	SEMICONDUCTOR CAP. SR K 0.015μF/25V or	CDA1EKS0X153
	SEMICONDUCTOR CAP. SR K 0.015μF/25V	12Y2153S
C 328	FILM CAP. 0.22μF/50V J	122Z313S
C 330	CERAMIC CAP.(AX) CH J 12pF/50V or	CCA1JJTCH120

* Mylar is a registered trademark of E. I. DuPont de Nemours and Company.

Ref. No.	Description	Part No.
	CHIP CERAMIC CAP. CH J 12pF/50V	CHE1JJBCH120
C 332	SEMICONDUCTOR CAP. SR K 0.01μF/25V or	CDA1EKS0X103
	SEMICONDUCTOR CAP. SR K 0.01μF/25V	12Y2103S
C 333	SEMICONDUCTOR CAP. SR K 0.01μF/25V or	CDA1EKS0X103
	SEMICONDUCTOR CAP. SR K 0.01μF/25V	12Y2103S
C 334	ELECTROLYTIC CAP. 100μF/10V M	CE1AMASDL101
C 335	CERAMIC CAP.(AX) F Z 0.01μF/25V or	CDA1EZT0F103
	CHIP CERAMIC CAP. F Z 0.01μF/50V	CHE1JZB0F103
C 336	FILM CAP. 0.22μF/50V J	122Z313S
C 337	CERAMIC CAP.(AX) F Z 0.01μF/25V	CDA1EZT0F103
C 338	CERAMIC CAP.(AX) F Z 0.01μF/25V	CDA1EZT0F103
C 339	CERAMIC CAP.(AX) F Z 0.01μF/25V	CDA1EZT0F103
C 340	ELECTROLYTIC CAP. 100μF/10V M	CE1AMASDL101
C 341	CERAMIC CAP.(AX) X K 3300pF/16V	CDA1CKT0X332
C 342	ELECTROLYTIC CAP. 1μF/50V M	CE1JMASDL010
C 343	CERAMIC CAP.(AX) SL J 47pF/50V or	CCA1JJTSL470
	CHIP CERAMIC CAP. SL J 47pF/50V	CHE1JJBSL470
C 344	CERAMIC CAP.(AX) SL J 47pF/50V or	CCA1JJTSL470
	CHIP CERAMIC CAP. SL J 47pF/50V	CHE1JJBSL470
C 345	CERAMIC CAP.(AX) SL J 47pF/50V	CCA1JJTSL470
C 371	ELECTROLYTIC CAP. 100μF/10V M	CE1AMASDL101
C 372	FILM CAP. 0.47μF/50V J	122Z317S
C 373	FILM CAP. 0.47μF/50V J	122Z317S
C 374	MYLAR CAP. 0.1μF/50V K	2250104S
C 375	CERAMIC CAP. CH J 47pF/50V	CCD1JJSCH470
C 376	CERAMIC CAP. CH J 82pF/50V	CCD1JJSCH820
C 377	CERAMIC CAP.(AX) F Z 0.01μF/25V or	CDA1EZT0F103
	CHIP CERAMIC CAP. F Z 0.01μF/50V	CHE1JZB0F103
C 541	CERAMIC CAP.(AX) F Z 0.01μF/25V or	CDA1EZT0F103
	CHIP CERAMIC CAP. F Z 0.01μF/50V	CHE1JZB0F103
C 542	ELECTROLYTIC CAP. 100μF/16V M	CE1CMASDL101
C 543	MYLAR CAP. 0.01μF/50V J or	CMA1JJS00103
	MYLAR CAP. 0.01μF/50V K	2250103S
C 544	ELECTROLYTIC CAP. 1μF/50V M LL or	CE1JMAULL1R0
	ELECTROLYTIC CAP. 1μF/50V M LL	CE1JMASLL1R0
C 545	ELECTROLYTIC CAP. 100μF/35V M	CE1GMASDL101
C 546	CERAMIC CAP.(AX) F Z 0.01μF/25V or	CDA1EZT0F103
	CHIP CERAMIC CAP. F Z 0.01μF/50V	CHE1JZB0F103
C 547	ELECTROLYTIC CAP. 100μF/35V M	CE1GMASDL101
C 548	CERAMIC CAP.(AX) F Z 0.01μF/25V or	CDA1EZT0F103
	CHIP CERAMIC CAP. F Z 0.01μF/50V	CHE1JZB0F103
C 549	CERAMIC CAP.(AX) SL J 10pF/50V	CCA1JJTSL100
C 550	ELECTROLYTIC CAP. 1μF/50V M LL or	CE1JMAULL1R0
	ELECTROLYTIC CAP. 1μF/50V M LL	CE1JMASLL1R0
C 551	ELECTROLYTIC CAP. 1000μF/25V M or	CE1EMZNDL102
	ELECTROLYTIC CAP. 1000μF/25V M	CE1EMZPDL102
C 552	MYLAR CAP. 0.056μF/50V J or	CMA1JJS00563
	MYLAR CAP. 0.056μF/50V KT	2250563S
C 571	CERAMIC CAP.(AX) B K 330pF/50V or	CCA1JKT0B331
	CHIP CERAMIC CAP. B K 330pF/50V	CHE1JKB0B331
C 572	CERAMIC CAP. B K 2200pF/500V	CCD2JKP0B222
C 573	CERAMIC CAP. B K 1000pF/500V	CCD2JKD0B102
C 574	METALLIZED FILM CAP. 0.0082μF/1.6KV J or	CA3C822DT007
	METALLIZED FILM CAP. 0.0082μF/1.6KV J	1220499
C 576	METARLIZED FILM CAP. 0.68μF/200V or	CT2E684DT003
	METALLIZED FILM CAP. 0.68μF/200V J or	1220513
	METALLIZED FILM CAP. 0.68μF/200V J	CT2D684F7001
C 577	CERAMIC CAP. B K 1000pF/500V	CCD2JKD0B102
C 578	ELECTROLYTIC CAP. 4.7μF/100V M or	CE2AMASDL4R7
	ELECTROLYTIC CAP. 4.7μF/100V M	CE2AMASDL4R7
C 579	CERAMIC CAP. B K 4700pF/500V	CCD2JKD0B472
C 580	CERAMIC CAP. B K 4700pF/500V	CCD2JKD0B472
C 582	ELECTROLYTIC CAP. 1μF/250V M(85C GH) or	CE2EMZDDL010
	ELECTROLYTIC CAP. 1μF/250V M or	CE2EMZNTL010
	ELECTROLYTIC CAP. 1μF/250V M W/F or	CE2EMZNDL1R0
	ELECTROLYTIC CAP. 1μF/250V	6220690

Ref. No.	Description	Part No.
C 583	ELECTROLYTIC CAP. 4.7μF/50V M	CE1JMASDL4R7
C 584	ELECTROLYTIC CAP. 22μF/50V M	CE1JMASDL220
C 601 ⚠	METALLIZED FILM CAP. 0.1μF/250V K or	CT2E104DC009
	METALLIZED FILM CAP. 0.1μF/250V K or	CT2E104DT001
	METALLIZED FILM CAP. 0.1μF/250V K	CT2E104NC011
C 603	CERAMIC CAP. B K 2200pF/500V or	CCD2JKD0B222
	CERAMIC CAP. 0.0022μF/250V	CCD2EZA0E222
C 604	CERAMIC CAP. B K 2200pF/500V or	CCD2JKD0B222
	CERAMIC CAP. 0.0022μF/250V	CCD2EZA0E222
C 605	CERAMIC CAP. B K 2200pF/500V or	CCD2JKD0B222
	CERAMIC CAP. 0.0022μF/250V	CCD2EZA0E222
C 606	CERAMIC CAP. B K 2200pF/500V or	CCD2JKD0B222
	CERAMIC CAP. 0.0022μF/250V	CCD2EZA0E222
C 607	ELECTROLYTIC CAP. 150μF/400V or	CA2H151NC027
	ELECTROLYTIC CAP. 150μF/400V M	CA2H151SM006
C 608	CERAMIC CAP. 220pF/2KV or	CCD3DKP0B221
	CERAMIC CAP. 220pF/2KV or	6220581
	CERAMIC CAP. 220pF/2KV	CCD3DKD0B221
C 609	MYLAR CAP. 0.068μF/50V K	2250683S
C 610	MYLAR CAP. 0.047μF/50V J or	CMA1JJS00473
	MYLAR CAP. 0.047μF/50V K	2250473S
C 611	CARBON RES. 1/4W J 27 Ω	1345270S
C 612	MYLAR CAP. 0.027μF/50V J or	CMA1JJS00273
	MYLAR CAP. 0.027μF/50V K	2250273S
C 613	ELECTROLYTIC CAP. 33μF/25V M	CE1EMASDL330
C 617 ⚠	CERAMIC CAP. 0.0047UF F CS or	CCG2HMP0F472
	CERAMIC CAP. 4700pF/250VAC	CA2B472MR017
C 618 ⚠	CERAMIC CAP. 0.0047UF F CS or	CCG2HMP0F472
	CERAMIC CAP. 4700pF/250VAC	CA2B472MR017
C 619 ⚠	CERAMIC CAP. 0.0047UF F CS or	CCG2HMP0F472
	CERAMIC CAP. 4700pF/250VAC	CA2B472MR017
C 621	CERAMIC CAP. 0.0015μF/2KV or	CCD3DKP0B152
	CERAMIC CAP. 0.0015μF/2KV or	6220586
	CERAMIC CAP. 0.0015μF/2KV	CCD3DKD0B152
C 625	ELECTROLYTIC CAP. 100μF/160V or	CE2CMZDDL101
	ELECTROLYTIC CAP. 100μF/160V M W/F or	CE2CMZNTL101
	ELECTROLYTIC CAP. 100μF/160V M or	122Z337
	ELECTROLYTIC CAP. 100μF/160V	CE2CMZNDL101
C 626	ELECTROLYTIC CAP. 47μF/160V M W/F or	CE2CMZDDL470
	ELECTROLYTIC CAP. 47μF/160V M W/F or	CE2CMZNTL470
	ELECTROLYTIC CAP. 47μF/160V M or	122Z336
	ELECTROLYTIC CAP. 47μF/160V M W/F	CE2CMZNDL470
C 627	ELECTROLYTIC CAP. 2200μF/35V M or	CE1GMZNDL222
	ELECTROLYTIC CAP. 2200μF/35V M	CE1GMZPDL222
C 628	ELECTROLYTIC CAP. 2200μF/16V M or	CE1CMZNDL222
	ELECTROLYTIC CAP. 2200μF/16V M	CE1CMZPDL222
C 629	ELECTROLYTIC CAP. 470μF/25V M or	CE1EMZNDL471
	ELECTROLYTIC CAP. 470μF/25V M	CE1EMZPDL471
C 630	CERAMIC CAP.(AX) CH J 15pF/50V or	CCA1JJTCH150
	CHIP CERAMIC CAP. CH J 15pF/50V	CHE1JJBCH150
C 631	ELECTROLYTIC CAP. 220μF/16V M	CE1CMASDL221
C 632	ELECTROLYTIC CAP. 220μF/10V M	CE1AMASDL221
C 633	ELECTROLYTIC CAP. 100μF/16V M	CE1CMASDL101
C 634	ELECTROLYTIC CAP. 100μF/10V M	CE1AMASDL101
C 637	ELECTROLYTIC CAP. 100μF/6.3V M	CE0KMASDL101
C 701	ELECTROLYTIC CAP. 47μF/16V M	CE1CMASDL470
C 702	ELECTROLYTIC CAP. 470μF/10V M	CE1AMASDL471
C 704	ELECTROLYTIC CAP. 4.7μF/50V M	CE1JMASDL4R7
C 706	ELECTROLYTIC CAP. 1μF/50V M	CE1JMASDL010
C 707	ELECTROLYTIC CAP. 10μF/50V M	CE1JMASDL100
C 708	CERAMIC CAP.(AX) B K 1000pF/50V or	CDA1JKT0B102
	CHIP CERAMIC CAP. B K 1000pF/50V	CHE1JKB0B102
C 709	CERAMIC CAP.(AX) F Z 0.01μF/25V or	CDA1EZT0F103
	CHIP CERAMIC CAP. F Z 0.01μF/50V	CHE1JZB0F103
C 710	ELECTROLYTIC CAP. 47μF/16V M	CE1CMASDL470
C 811	CERAMIC CAP.(AX) F Z 0.01μF/25V	CDA1EZT0F103

Ref. No.	Description	Part No.
C 812	ELECTROLYTIC CAP. 100μF/25V M	CE1EMASDL101
C 813	MYLAR CAP. 0.015μF/50V J or	CMA1JJS00153
	MYLAR CAP. 0.015μF/50V K	2250153S
C 814	MYLAR CAP. 0.022μF/50V J or	CMA1JJS00223
	MYLAR CAP. 0.022μF/50V K	2250223S
C 815	MYLAR CSP. 0.012μF/50V J or	CMA1JJS00123
	MYLAR CAP. 0.012μF/50V K	2250123S
C 816	ELECTROLYTIC CAP. 1μF/50V M	CE1JMASDL010
C 819	CERAMIC CAP.(AX) F Z 0.01μF/25V or	CDA1EZT0F103
	CHIP CERAMIC CAP. F Z 0.01μF/50V	CHE1JZB0F103
C 820	CERAMIC CAP.(AX) B K 560pF/50V or	CCA1JKT0B561
	CHIP CERAMIC CAP. B K 560pF/50V	CHE1JKB0B561
C 821	ELECTROLYTIC CAP. 47μF/6.3V M	CE0KMASDL470
C 822	ELECTROLYTIC CAP. 470μF/16V M	CE1CMASDL471
	SEMICONDUCTOR CAP. SR K 0.018μF/25V or	CDA1EKS0X183
	SEMICONDUCTOR CAP. SR K 0.018μF/25V	12Y2183S
C 825	MYLAR CAP. 0.1μF/50V K	2250104S
C 829	CERAMIC CAP.(AX) F Z 0.01μF/25V or	CDA1EZT0F103
	CHIP CERAMIC CAP. F Z 0.01μF/50V	CHE1JZB0F103
C 830	ELECTROLYTIC CAP. 1000μF/25V M or	CE1EMZNDL102
	ELECTROLYTIC CAP. 1000μF/25V M	CE1EMZPDL102
C 831	SEMICONDUCTOR CAP. SR K 0.012μF/25V or	CDA1EKS0X123
	SEMICONDUCTOR CAP. SR K 0.012μF/25V	12Y2123S
C 850	ELECTROLYTIC CAP. 100μF/16V M	CE1CMZPDL101
	CONNECTORS	
CN 101	STRAIGHT CONNECTOR BASE 00 8283 0412 00 000 or	J383C04UG002
	STRAIGHT PIN HEADER 4P 173981-4	1770260
CN 571	CONNECTOR BASE 5P or	1730813
	CONNECTOR BASE 5P RTB-1.5-5P	J3RTC05JG001
CN 601	CONNECTOR BASE 2P or	1730693
	CONNECTOR BASE 2P RTB-1.5-2P	J3RTC02JG001
CN 801	STRAIGHT CONNECTOR BASE 00 8283 0212 00 000 or	J383C02UG002
	STRAIGHT PIN HEADER 2P 173981-2	1770258
CN 802	STRAIGHT CONNECTOR BASE 00 8283 0212 00 000 or	J383C02UG002
	STRAIGHT PIN HEADER 2P 173981-2	1770258
	DIODES	
D 31	SWITCHING DIODE 1N4148M or	QDTZ01N4148M
	SWITCHING DIODE 1N4148M	NDTZ01N4148M
D 81	SWITCHING DIODE 1N4148M or	QDTZ01N4148M
	SWITCHING DIODE 1N4148M	NDTZ01N4148M
D 82	SWITCHING DIODE 1N4148M or	QDTZ01N4148M
	SWITCHING DIODE 1N4148M	NDTZ01N4148M
D 85	SWITCHING DIODE 1N4148M or	QDTZ01N4148M
	SWITCHING DIODE 1N4148M	NDTZ01N4148M
D 86	IC L5631 or	L5631
	IC L5630	L5630
D 101	ZENER DIODE UZ-5.6BSB	QDTB0UZ5R6BS
D 102	ZENER DIODE UZ-24BSB TA	QDTB00UZ24BS
D 103	LED LAMP CSL-500H3DT	NP5ZCSL500H3
D 105	SWITCHING DIODE 1N4148M or	QDTZ01N4148M
	SWITCHING DIODE 1N4148M	NDTZ01N4148M
D 301	SWITCHING DIODE 1N4148M or	QDTZ01N4148M
	SWITCHING DIODE 1N4148M	NDTZ01N4148M
D 302	SWITCHING DIODE 1N4148M or	QDTZ01N4148M
	SWITCHING DIODE 1N4148M	NDTZ01N4148M
D 311	SWITCHING DIODE 1N4148M or	QDTZ01N4148M
	SWITCHING DIODE 1N4148M	NDTZ01N4148M
D 571	FAST RECOVERY DIODE ERB44-04L3 or	QDQZ0ERB4404
	FAST RECOVERY DIODE ERB44-02L3	QCDZERB4402L
D 572	FAST RECOVERY DIODE ERB44-04L3 or	QDQZ0ERB4404
	FAST RECOVERY DIODE ERB44-02L3	QCDZERB4402L
D 573	ZENER DIODE UZ-8.2BSB	QDTB0UZ8R2BS
D 574	SWITCHING DIODE 1N4148M or	QDTZ01N4148M
	SWITCHING DIODE 1N4148M	NDTZ01N4148M

Ref. No.	Description	Part No.
D 575	ZENER DIODE UZ-20BSB	QDTB00UZ20BS
D 576	ZENER DIODE UZ6.2BSC-TA	QDTC0UZ6R2BS
D 602	SWITCHING DIODE 1N4148M or	QDTZ01N4148M
	SWITCHING DIODE 1N4148M	NDTZ01N4148M
D 603	RECTIFIER DIODE ERB12-10L3	QDQZ0ERB1210
D 604	RECTIFIER DIODE ERB12-10L3	QDQZ0ERB1210
D 605	RECTIFIER DIODE ERB12-10L3	QDQZ0ERB1210
D 606	RECTIFIER DIODE ERB12-10L3	QDQZ0ERB1210
D 607	ZENER DIODE UZ-12BSB	QDTB00UZ12BS
D 609	ZENER DIODE UZ-8.2BSC	QDTC0UZ8R2BS
D 610	SWITCHING DIODE 1N4148M or	QDTZ01N4148M
	SWITCHING DIODE 1N4148M	NDTZ01N4148M
D 611	SWITCHING DIODE 1N4148M or	QDTZ01N4148M
	SWITCHING DIODE 1N4148M	NDTZ01N4148M
D 612	SWITCHING DIODE 1N4148M or	QDTZ01N4148M
	SWITCHING DIODE 1N4148M	NDTZ01N4148M
D 613	SWITCHING DIODE 1N4148M or	QDTZ01N4148M
	SWITCHING DIODE 1N4148M	NDTZ01N4148M
D 621	FAST RECOVERY DIODE ERD38-06L	AERD3806L000
D 622	FAST RECOVERY DIODE ERB44-04L3 or	QDQZ0ERB4404
	FAST RECOVERY DIODE ERB44-02L3	QCDZERB4402L
D 623	FAST RECOVERY DIODE ERB44-04L3 or	QDQZ0ERB4404
	FAST RECOVERY DIODE ERB44-02L3	QCDZERB4402L
D 624	FAST RECOVERY DIODE ERB44-04L3 or	QDQZ0ERB4404
	FAST RECOVERY DIODE ERB44-02L3	QCDZERB4402L
D 625	ZENER DIODE RD33FB or	QDQZ000RD33F
	ZENER DIODE 1ZB33	QDQZ0001ZB33
D 626	ZENER DIODE UZ-3.9BSB	QDTB0UZ3R9BS
D 627	SWITCHING DIODE 1N4148M or	QDTZ01N4148M
	SWITCHING DIODE 1N4148M	NDTZ01N4148M
D 628	SWITCHING DIODE 1N4148M or	QDTZ01N4148M
	SWITCHING DIODE 1N4148M	NDTZ01N4148M
D 630	SWITCHING DIODE 1N4148M or	QDTZ01N4148M
	SWITCHING DIODE 1N4148M	NDTZ01N4148M
D 631	ZENER DIODE UZ-6.8BSB	QDTB0UZ6R8BS
D 632	SWITCHING DIODE 1N4148M or	QDTZ01N4148M
	SWITCHING DIODE 1N4148M	NDTZ01N4148M
D 633	SWITCHING DIODE 1N4148M or	QDTZ01N4148M
	SWITCHING DIODE 1N4148M	NDTZ01N4148M
D 636	SWITCHING DIODE 1N4148M or	QDTZ01N4148M
	SWITCHING DIODE 1N4148M	NDTZ01N4148M
D 637	SWITCHING DIODE 1N4148M or	QDTZ01N4148M
	SWITCHING DIODE 1N4148M	NDTZ01N4148M
D 638	SWITCHING DIODE 1N4148M or	QDTZ01N4148M
	SWITCHING DIODE 1N4148M	NDTZ01N4148M
D 640	ZENER DIODE UZ-9.1BSB	QDTB0UZ9R1BS
D 641	SWITCHING DIODE 1N4148M or	QDTZ01N4148M
	SWITCHING DIODE 1N4148M	NDTZ01N4148M
D 642	SWITCHING DIODE 1N4148M or	QDTZ01N4148M
	SWITCHING DIODE 1N4148M	NDTZ01N4148M
D 643	SWITCHING DIODE 1N4148M or	QDTZ01N4148M
	SWITCHING DIODE 1N4148M	NDTZ01N4148M
D 644	ZENER DIODE UZ-4.7BSC	QDTC0UZ4R7BS
D 645	SWITCHING DIODE 1N4148M or	QDTZ01N4148M
	SWITCHING DIODE 1N4148M	NDTZ01N4148M
D 646	SWITCHING DIODE 1N4148M or	QDTZ01N4148M
	SWITCHING DIODE 1N4148M	NDTZ01N4148M
D 701	SWITCHING DIODE 1N4148M or	QDTZ01N4148M
	SWITCHING DIODE 1N4148M	NDTZ01N4148M
D 702	SWITCHING DIODE 1N4148M or	QDTZ01N4148M
	SWITCHING DIODE 1N4148M	NDTZ01N4148M
D 705	ZENER DIODE UZ-2.7BSB	QDTB0UZ2R7BS
D 706	ZENER DIODE UZ-8.2BSB	QDTB0UZ8R2BS
D 709	SWITCHING DIODE 1N4148M or	QDTZ01N4148M
	SWITCHING DIODE 1N4148M	NDTZ01N4148M
D 710	SWITCHING DIODE 1N4148M or	QDTZ01N4148M

Ref. No.	Description	Part No.
	SWITCHING DIODE 1N4148M	NDTZ01N4148M
D 711	ZENER DIODE UZ-12BSB	QDTB00UZ12BS
D 802	SWITCHING DIODE 1N4148M or	QDTZ01N4148M
	SWITCHING DIODE 1N4148M	NDTZ01N4148M
D 803	ZENER DIODE UZ-12BSB	QDTB00UZ12BS
D 902	SWITCHING DIODE 1N4148M or	QDTZ01N4148M
	SWITCHING DIODE 1N4148M	NDTZ01N4148M
	ICS	
IC 101	IC:TV MICON M37220M3-103FP	QSMQB0SMB118
IC 102	IC:MEMORY 24LC02B/P or	NSMMA0SMH003
	IC:EEPROM 2K AT24C02-10PC or	NSMMA0SAZ004
	IC:MEMORY ST24C02B6 or	NSMMA0ZSS005
	IC:MEMORY ST24C02CB1	NSMMA0ZSS003
IC 103	IC:RESET MN1380-R	QSMLA0ZMS001
IC 301	IC:CHROMA/IF 1 CHIP M52340SP	QSBLA0SMB018
IC 302	IC:1H DELAY LINE U3660M or	NSMLA0ST8001
	IC:1H DELAY LINE U3661M	NSMLA0ST8002
IC 371	IC:SECAM M52325AP	QSBLA0SMB017
IC 541	IC:VERTICAL OUT LA7837	QSBLA0ZSY003
IC 601 ⚠	PHOTO COUPLER LTV817M(A) or	NPEA0LTV817M
	PHOTO COUPLER LTV817M(B)	NPEB0LTV817M
IC 701	IC:ANALOG SWITCH TC4053BP	14DW168
IC 802	IC LA4261	14L0046
	INDUCTORS	
L 1	INDUCTOR 100μH K 5FT or	LLARKCSTU101
	INDUCTOR 100μH K 5FT	LLARKDSKA101
L 31	INDUCTOR 1.2μH K 26T or	LLAXKATTU1R2
	INDUCTOR 1.2μH K 26T	LLAXKDTKA1R2
L 35	CASING COIL KS1336NC or	LFA07V0LH008
	CASING COIL R2299-011-96 or	LFA07V0SF125
	VCO COIL R12-P423	LFA07V0MM042
L 36	INDUCTOR 1.0μH K 26T or	LLAXKATTU1R0
	INDUCTOR 1.0μH K 26T	LLAXKDTKA1R0
L 37	INDUCTOR 100μH K 5FT or	LLARKCSTU101
	INDUCTOR 100μH K 5FT	LLARKDSKA101
L 38	INDUCTOR 8.2μH K 26T or	LLAXKATTU8R2
	INDUCTOR 8.2μH K 26T	LLAXKDTKA8R2
L 39	INDUCTOR 5.6μH K 26T or	LLAXKATTU5R6
	INDUCTOR 5.6μH K 26T	LLAXKDTKA5R6
L 40	INDUCTOR 22μH K 26T or	LLAXKATTU220
	INDUCTOR 22μH K 26T	LLAXKDTKA220
L 41	CERAMIC CAP.(AX) SL J 47pF/50V	CCA1JJTSL470
L 301	INDUCTOR 22μH K 26T or	LLAXKATTU220
	INDUCTOR 22μH K 26T	LLAXKDTKA220
L 371	INDUCTOR 8.2μH K 26T or	LLAXKATTU8R2
	INDUCTOR 8.2μH K 26T	LLAXKDTKA8R2
L 541	INDUCTOR 10μH K 26T or	LLAXKATTU100
	INDUCTOR 10μH K 26T	LLAXKDTKA100
L 571	PCB JUMPER D0.6-P5.0	JW5.0T
L 572	PCB JUMPER D0.6-P7.5	JW7.5T
L 602	LINE FILTER 5.0MH 6Y075 or	LLBG00ZKT004
	LINE FILTER 4.2MH or	LLBG00ZTZ001
	LINE FILTER 3.3MH	LLBG00ZMS008
L 621	POT COIL 47μH K	LLBD00PKV004
L 702	PCB JUMPER D0.6-P5.0	JW5.0T
	TRANSISTORS	
Q 31	TRANSISTOR 2SC3000E or	2SC3000EZ
	TRANSISTOR 2SC3000D	2SC3000DZ
Q 32	TRANSISTOR KTC3198GR TO-92 or	NQS40KTC3198
	TRANSISTOR KTC3199(GR) or	NQS10KTC3199
	TRANSISTOR 2SC3331(T) or	QSC3331TNPAA
	TRANSISTOR 2SC3331(U) or	QSC3331UNPAA
	TRANSISTOR 2SC1815-GR-TPE2	QQS102SC1815
Q 33	TRANSISTOR KTC3198GR TO-92 or	NQS40KTC3198
	TRANSISTOR KTC3199(GR) or	NQS10KTC3199
	TRANSISTOR 2SC3331(T) or	QSC3331TNPAA
	TRANSISTOR 2SC3331(U) or	QSC3331UNPAA
	TRANSISTOR 2SC1815-GR-TPE2	QQS102SC1815
Q 81	TRANSISTOR KTA1266(GR) or	NQS40KTA1266
	TRANSISTOR KTA1267(GR) or	NQS10KTA1267
	TRANSISTOR 2SA1318(T)-AANP or	2SA1318TZ
	TRANSISTOR 2SA1318(U)-AANP or	2SA1318UZ
	TRANSISTOR 2SA1015-GR-TPE2	QQS102SA1015
Q 82	TRANSISTOR KTA1266(GR) or	NQS40KTA1266
	TRANSISTOR KTA1267(GR) or	NQS10KTA1267
	TRANSISTOR 2SA1318(T)-AANP or	2SA1318TZ
	TRANSISTOR 2SA1318(U)-AANP or	2SA1318UZ
	TRANSISTOR 2SA1015-GR-TPE2	QQS102SA1015
Q 83	TRANSISTOR KTA1266(GR) or	NQS40KTA1266
	TRANSISTOR KTA1267(GR) or	NQS10KTA1267
	TRANSISTOR 2SA1318(T)-AANP or	2SA1318TZ
	TRANSISTOR 2SA1318(U)-AANP or	2SA1318UZ
	TRANSISTOR 2SA1015-GR-TPE2	QQS102SA1015
Q 84	TRANSISTOR KTC3198GR TO-92 or	NQS40KTC3198
	TRANSISTOR KTC3199(GR) or	NQS10KTC3199
	TRANSISTOR 2SC3331(T) or	QSC3331TNPAA
	TRANSISTOR 2SC3331(U) or	QSC3331UNPAA
	TRANSISTOR 2SC1815-GR-TPE2	QQS102SC1815
Q 101	TRANSISTOR KTC3198GR TO-92 or	NQS40KTC3198
	TRANSISTOR KTC3199(GR) or	NQS10KTC3199
	TRANSISTOR 2SC3331(T) or	QSC3331TNPAA
	TRANSISTOR 2SC3331(U) or	QSC3331UNPAA
	TRANSISTOR 2SC1815-GR-TPE2	QQS102SC1815
Q 103	TRANSISTOR KTC3198GR TO-92 or	NQS40KTC3198
	TRANSISTOR KTC3199(GR) or	NQS10KTC3199
	TRANSISTOR 2SC3331(T) or	QSC3331TNPAA
	TRANSISTOR 2SC3331(U) or	QSC3331UNPAA
	TRANSISTOR 2SC1815-GR-TPE2	QQS102SC1815
Q 104	TRANSISTOR KTA1266(GR) or	NQS40KTA1266
	TRANSISTOR KTA1267(GR) or	NQS10KTA1267
	TRANSISTOR 2SA1318(T)-AANP or	2SA1318TZ
	TRANSISTOR 2SA1318(U)-AANP or	2SA1318UZ
	TRANSISTOR 2SA1015-GR-TPE2	QQS102SA1015
Q 105	TRANSISTOR KTC3198GR TO-92 or	NQS40KTC3198
	TRANSISTOR KTC3199(GR) or	NQS10KTC3199
	TRANSISTOR 2SC3331(T) or	QSC3331TNPAA
	TRANSISTOR 2SC3331(U) or	QSC3331UNPAA
	TRANSISTOR 2SC1815-GR-TPE2	QQS102SC1815
Q 106	TRANSISTOR KTC3198GR TO-92 or	NQS40KTC3198
	TRANSISTOR KTC3199(GR) or	NQS10KTC3199
	TRANSISTOR 2SC3331(T) or	QSC3331TNPAA
	TRANSISTOR 2SC3331(U) or	QSC3331UNPAA
	TRANSISTOR 2SC1815-GR-TPE2	QQS102SC1815
Q 108	TRANSISTOR KTC3198GR TO-92 or	NQS40KTC3198
	TRANSISTOR KTC3199(GR) or	NQS10KTC3199
	TRANSISTOR 2SC3331(T) or	QSC3331TNPAA
	TRANSISTOR 2SC3331(U) or	QSC3331UNPAA
	TRANSISTOR 2SC1815-GR-TPE2	QQS102SC1815
Q 109	TRANSISTOR KTC3198GR TO-92 or	NQS40KTC3198
	TRANSISTOR KTC3199(GR) or	NQS10KTC3199
	TRANSISTOR 2SC3331(T) or	QSC3331TNPAA
	TRANSISTOR 2SC3331(U) or	QSC3331UNPAA
	TRANSISTOR 2SC1815-GR-TPE2	QQS102SC1815
Q 301	TRANSISTOR KTC3198GR TO-92 or	NQS40KTC3198
	TRANSISTOR KTC3199(GR) or	NQS10KTC3199
	TRANSISTOR 2SC3331(T) or	QSC3331TNPAA
	TRANSISTOR 2SC3331(U) or	QSC3331UNPAA
	TRANSISTOR 2SC1815-GR-TPE2	QQS102SC1815
Q 302	TRANSISTOR KTC3198GR TO-92 or	NQS40KTC3198
	TRANSISTOR KTC3199(GR) or	NQS10KTC3199
	TRANSISTOR 2SC3331(T) or	QSC3331TNPAA
	TRANSISTOR 2SC3331(U) or	QSC3331UNPAA

Ref. No.	Description	Part No.
	TRANSISTOR 2SC1815-GR-TPE2	QQS102SC1815
Q 304	TRANSISTOR KTA1266(GR) or	NQS40KTA1266
	TRANSISTOR KTA1267(GR) or	NQS10KTA1267
	TRANSISTOR 2SA1318(T)-AANP or	2SA1318TZ
	TRANSISTOR 2SA1318(U)-AANP or	2SA1318UZ
	TRANSISTOR 2SA1015-GR-TPE2	QQS102SA1015
Q 541	TRANSISTOR KTC3198GR TO-92 or	NQS40KTC3198
	TRANSISTOR KTC3199(GR) or	NQS10KTC3199
	TRANSISTOR 2SC3331(T) or	QSC3331TNPAA
	TRANSISTOR 2SC3331(U) or	QSC3331UNPAA
	TRANSISTOR 2SC1815-GR-TPE2	QQS102SC1815
Q 571	TRANSISTOR 2SC2482 TPE6	QQSZ02SC2482
Q 572	TRANSISTOR 2SD2499 or	QQ6Z02SD2499
	TRANSISTOR 2SD1878 or	QQ5Z02SD1878
	TRANSISTOR 2SD2333	QQPZ02SD2333
Q 573	TRANSISTOR KTC3198GR TO-92 or	NQS40KTC3198
	TRANSISTOR KTC3199(GR) or	NQS10KTC3199
	TRANSISTOR 2SC3331(T) or	QSC3331TNPAA
	TRANSISTOR 2SC3331(U) or	QSC3331UNPAA
	TRANSISTOR 2SC1815-GR-TPE2	QQS102SC1815
Q 574	TRANSISTOR KTA1266(GR) or	NQS40KTA1266
	TRANSISTOR KTA1267(GR) or	NQS10KTA1267
	TRANSISTOR 2SA1318(T)-AANP or	2SA1318TZ
	TRANSISTOR 2SA1318(U)-AANP or	2SA1318UZ
	TRANSISTOR 2SA1015-GR-TPE2	QQS102SA1015
Q 601 ⚠	TRANSISTOR 2SC3866MR-08	QQSZ02SC3866
Q 602	TRANSISTOR 2SD734G-NP-AQ or	QQSG002SD734
	TRANSISTOR 2SD734F-NP-AQ	QQSF002SD734
Q 603	TRANSISTOR KTC3198GR TO-92 or	NQS40KTC3198
	TRANSISTOR KTC3199(GR) or	NQS10KTC3199
	TRANSISTOR 2SC3331(T) or	QSC3331TNPAA
	TRANSISTOR 2SC3331(U) or	QSC3331UNPAA
	TRANSISTOR 2SC1815-GR-TPE2	QQS102SC1815
Q 621	TRANSISTOR 2SC2271(D)-AEMP or	2SC2271DZ
	TRANSISTOR 2SC2271(E)-AEMP or	2SC2271EZ
	TRANSISTOR 2SC1473(R)	QQSR02SC1473
Q 622	TRANSISTOR 2SC2271(D)-AEMP or	2SC2271DZ
	TRANSISTOR 2SC2271(E)-AEMP or	2SC2271EZ
	TRANSISTOR 2SC1473(R)	QQSR02SC1473
Q 623	TRANSISTOR 2SC2271(D)-AEMP or	2SC2271DZ
	TRANSISTOR 2SC2271(E)-AEMP or	2SC2271EZ
	TRANSISTOR 2SC1473(R)	QQSR02SC1473
Q 624	TRANSISTOR KTC3198GR TO-92 or	NQS40KTC3198
	TRANSISTOR KTC3199(GR) or	NQS10KTC3199
	TRANSISTOR 2SC3331(T) or	QSC3331TNPAA
	TRANSISTOR 2SC3331(U) or	QSC3331UNPAA
	TRANSISTOR 2SC1815-GR-TPE2	QQS102SC1815
Q 625	TRANSISTOR KTC3198GR TO-92 or	NQS40KTC3198
	TRANSISTOR KTC3199(GR) or	NQS10KTC3199
	TRANSISTOR 2SC3331(T) or	QSC3331TNPAA
	TRANSISTOR 2SC3331(U) or	QSC3331UNPAA
	TRANSISTOR 2SC1815-GR-TPE2	QQS102SC1815
Q 626	TRANSISTOR KTD2058(GR) or	NQ440KTD2058
	TRANSISTOR KTD2058	NQQY0KTD2058
Q 627	TRANSISTOR KTD2058(GR) or	NQ440KTD2058
	TRANSISTOR KTD2058	NQQY0KTD2058
Q 628	TRANSISTOR KTC3198GR TO-92 or	NQS40KTC3198
	TRANSISTOR KTC3199(GR) or	NQS10KTC3199
	TRANSISTOR 2SC3331(T) or	QSC3331TNPAA
	TRANSISTOR 2SC3331(U) or	QSC3331UNPAA
	TRANSISTOR 2SC1815-GR-TPE2	QQS102SC1815
Q 701	TRANSISTOR KTC3198GR TO-92 or	NQS40KTC3198
	TRANSISTOR KTC3199(GR) or	NQS10KTC3199
	TRANSISTOR 2SC3331(T) or	QSC3331TNPAA
	TRANSISTOR 2SC3331(U) or	QSC3331UNPAA
	TRANSISTOR 2SC1815-GR-TPE2	QQS102SC1815

Ref. No.	Description	Part No.
Q 702	TRANSISTOR KTA1266(GR) or	NQS40KTA1266
	TRANSISTOR KTA1267(GR) or	NQS10KTA1267
	TRANSISTOR 2SA1318(T)-AANP or	2SA1318TZ
	TRANSISTOR 2SA1318(U)-AANP or	2SA1318UZ
	TRANSISTOR 2SA1015-GR-TPE2	QQS102SA1015
Q 703	TRANSISTOR KTC3198GR TO-92 or	NQS40KTC3198
	TRANSISTOR KTC3199(GR) or	NQS10KTC3199
	TRANSISTOR 2SC3331(T) or	QSC3331TNPAA
	TRANSISTOR 2SC3331(U) or	QSC3331UNPAA
	TRANSISTOR 2SC1815-GR-TPE2	QQS102SC1815
Q 704	TRANSISTOR KTA1266(GR) or	NQS40KTA1266
	TRANSISTOR KTA1267(GR) or	NQS10KTA1267
	TRANSISTOR 2SA1318(T)-AANP or	2SA1318TZ
	TRANSISTOR 2SA1318(U)-AANP or	2SA1318UZ
	TRANSISTOR 2SA1015-GR-TPE2	QQS102SA1015
Q 705	TRANSISTOR KTA1266(GR) or	NQS40KTA1266
	TRANSISTOR KTA1267(GR) or	NQS10KTA1267
	TRANSISTOR 2SA1318(T)-AANP or	2SA1318TZ
	TRANSISTOR 2SA1318(U)-AANP or	2SA1318UZ
	TRANSISTOR 2SA1015-GR-TPE2	QQS102SA1015
Q 706	TRANSISTOR KTC3198GR TO-92 or	NQS40KTC3198
	TRANSISTOR KTC3199(GR) or	NQS10KTC3199
	TRANSISTOR 2SC3331(T) or	QSC3331TNPAA
	TRANSISTOR 2SC3331(U) or	QSC3331UNPAA
	TRANSISTOR 2SC1815-GR-TPE2	QQS102SC1815
Q 806	TRANSISTOR KTC3198GR TO-92 or	NQS40KTC3198
	TRANSISTOR KTC3199(GR) or	NQS10KTC3199
	TRANSISTOR 2SC3331(T) or	QSC3331TNPAA
	TRANSISTOR 2SC3331(U) or	QSC3331UNPAA
	TRANSISTOR 2SC1815-GR-TPE2	QQS102SC1815
Q 807	TRANSISTOR KTC3198GR TO-92 or	NQS40KTC3198
	TRANSISTOR KTC3199(GR) or	NQS10KTC3199
	TRANSISTOR 2SC3331(T) or	QSC3331TNPAA
	TRANSISTOR 2SC3331(U) or	QSC3331UNPAA
	TRANSISTOR 2SC1815-GR-TPE2	QQS102SC1815
Q 808	TRANSISTOR KTC3198GR TO-92 or	NQS40KTC3198
	TRANSISTOR KTC3199(GR) or	NQS10KTC3199
	TRANSISTOR 2SC3331(T) or	QSC3331TNPAA
	TRANSISTOR 2SC3331(U) or	QSC3331UNPAA
	TRANSISTOR 2SC1815-GR-TPE2	QQS102SC1815
Q 902	TRANSISTOR KTC3198GR TO-92 or	NQS40KTC3198
	TRANSISTOR KTC3199(GR) or	NQS10KTC3199
	TRANSISTOR 2SC3331(T) or	QSC3331TNPAA
	TRANSISTOR 2SC3331(U) or	QSC3331UNPAA
	TRANSISTOR 2SC1815-GR-TPE2	QQS102SC1815
Q 903	TRANSISTOR KTA1266(GR) or	NQS40KTA1266
	TRANSISTOR KTA1267(GR) or	NQS10KTA1267
	TRANSISTOR 2SA1318(T)-AANP or	2SA1318TZ
	TRANSISTOR 2SA1318(U)-AANP or	2SA1318UZ
	TRANSISTOR 2SA1015-GR-TPE2	QQS102SA1015
	RESISTORS	
R 1	CARBON RES. 1/4W J 2.2k Ω	RCX4JATZ0222
R 2	CARBON RES. 1/4W J 22k Ω	RCX4JATZ0223
R 31	CARBON RES. 1/4W J 100 Ω	RCX4JATZ0101
R 32	CARBON RES. 1/4W J 82 Ω or	RCX4JATZ0820
	CHIP RES. 1/10W J 82 Ω	RRXAJBBZ0820
R 33	CARBON RES. 1/4W J 6.8k Ω	RCX4JATZ0682
R 34	CARBON RES. 1/4W J 1.5k Ω or	RCX4JATZ0152
	CHIP RES. 1/10W J 1.5k Ω	RRXAJBBZ0152
R 35	CARBON RES. 1/4W J 1k Ω	RCX4JATZ0102
R 36	CARBON RES. 1/4W J 33 Ω or	RCX4JATZ0330
	CHIP RES. 1/10W J 33 Ω	RRXAJBBZ0330
R 39	CARBON RES. 1/4W J 56k Ω or	RCX4JATZ0563
	CHIP RES. 1/10W J 56k Ω	RRXAJBBZ0563
R 40	CARBON RES. 1/4W J 22k Ω or	RCX4JATZ0223
	CHIP RES. 1/10W J 22k Ω	RRXAJBBZ0223

Ref. No.	Description	Part No.
R 41	CARBON RES. 1/4W J 33k Ω or	RCX4JATZ0333
	CHIP RES. 1/10W J 33k Ω	RRXAJBBZ0333
R 42	CARBON RES. 1/4W J 47k Ω or	RCX4JATZ0473
	CHIP RES. 1/10W J 47k Ω	RRXAJBBZ0473
R 44	CARBON RES. 1/4W J 150 Ω	RCX4JATZ0151
R 46	PCB JUMPER D0.6-P5.0	JW5.0T
R 48	CARBON RES. 1/4W J 1k Ω or	RCX4JATZ0102
	CHIP RES. 1/10W J 1k Ω	RRXAJBBZ0102
R 50	CARBON RES. 1/4W J 1.5k Ω	RCX4JATZ0152
R 51	CARBON RES. 1/4W J 10k Ω or	RCX4JATZ0103
	CHIP RES. 1/10W J 10k Ω	RRXAJBBZ0103
R 52	CARBON RES. 1/4W J 1k Ω	RCX4JATZ0102
R 53	CARBON RES. 1/4W J 47k Ω or	RCX4JATZ0473
	CHIP RES. 1/10W J 47k Ω	RRXAJBBZ0473
R 55	PCB JUMPER D0.6-P5.0	JW5.0T
R 57	PCB JUMPER D0.6-P5.0	JW5.0T
R 58	PCB JUMPER D0.6-P5.0	JW5.0T
R 81	CARBON RES. 1/4W J 4.7 Ω or	RCX4JATZ04R7
	CHIP RES. 1/10W J 4.7 Ω	RRXAJBBZ04R7
R 82	CARBON RES. 1/4W J 22k Ω or	RCX4JATZ0223
	CHIP RES. 1/10W J 22k Ω	RRXAJBBZ0223
R 83	CARBON RES. 1/4W J 22k Ω or	RCX4JATZ0223
	CHIP RES. 1/10W J 22k Ω	RRXAJBBZ0223
R 84	CARBON RES. 1/4W J 22k Ω	RCX4JATZ0223
R 85	CARBON RES. 1/4W J 22k Ω or	RCX4JATZ0223
	CHIP RES. 1/10W J 22k Ω	RRXAJBBZ0223
R 86	CARBON RES. 1/4W J 3.3k Ω or	RCX4JATZ0332
	CHIP RES. 1/10W J 3.3k Ω	RRXAJBBZ0332
R 87	CARBON RES. 1/4W J 22k Ω or	RCX4JATZ0223
	CHIP RES. 1/10W J 22k Ω	RRXAJBBZ0223
R 88	CARBON RES. 1/4W J 3.3k Ω	RCX4JATZ0332
R 89	CARBON RES. 1/4W J 10k Ω or	RCX4JATZ0103
	CHIP RES. 1/10W J 10k Ω	RRXAJBBZ0103
R 90	CARBON RES. 1/4W J 12k Ω or	RCX4JATZ0123
	CHIP RES. 1/10W J 12k Ω	RRXAJBBZ0123
R 91	CARBON RES. 1/4W J 12k Ω or	RCX4JATZ0123
	CHIP RES. 1/10W J 12k Ω	RRXAJBBZ0123
R 92	CARBON RES. 1/4W J 22k Ω	RCX4JATZ0223
R 93	CARBON RES. 1/4W J 10k Ω	RCX4JATZ0103
R 94	CARBON RES. 1/4W J 22k Ω or	RCX4JATZ0223
	CHIP RES. 1/10W J 22k Ω	RRXAJBBZ0223
R 95	CARBON RES. 1/4W J 15k Ω or	RCX4JATZ0153
	CHIP RES. 1/10W J 15k Ω	RRXAJBBZ0153
R 96	CARBON RES. 1/4W J 15k Ω or	RCX4JATZ0153
	CHIP RES. 1/10W J 15k Ω	RRXAJBBZ0153
R 97	CARBON RES. 1/4W J 2.2k Ω or	RCX4JATZ0222
	CHIP RES. 1/10W J 2.2k Ω	RRXAJBBZ0222
R 98	METAL RESISTOR 1W J 15k Ω or	RN01153HH001
	METAL RESISTOR 1W J 15k Ω or	RN01153KA015
	METAL RESISTOR 1W J 15k Ω	RN01153KE004
R 102	CARBON RES. 1/4W J 6.8k Ω	RCX4JATZ0682
R 103	CARBON RES. 1/4W J 22k Ω	RCX4JATZ0223
R 105	CARBON RES. 1/4W J 10k Ω	RCX4JATZ0103
R 108	CARBON RES. 1/4W J 22k Ω or	RCX4JATZ0223
	CARBON RES. 1/4W J 22k Ω	RCX4JATZ0223
R 109	CARBON RES. 1/4W J 10k Ω or	RCX4JATZ0103
	CHIP RES. 1/10W J 10k Ω	RRXAJBBZ0103
R 110	CARBON RES. 1/4W J 4.7k Ω or	RCX4JATZ0472
	CHIP RES. 1/10W J 4.7k Ω	RRXAJBBZ0472
R 111	CARBON RES. 1/4W J 22k Ω or	RCX4JATZ0223
	CHIP RES. 1/10W J 22k Ω	RRXAJBBZ0223
R 112	CARBON RES. 1/4W J 6.8k Ω	RCX4JATZ0682
R 113	CARBON RES. 1/4W J 22k Ω or	RCX4JATZ0223
	CHIP RES. 1/10W J 22k Ω	RRXAJBBZ0223
R 114	PCB JUMPER D0.6-P5.0	JW5.0T
R 115	PCB JUMPER D0.6-P5.0	JW5.0T

Ref. No.	Description	Part No.
R 116	CARBON RES. 1/4W J 15k Ω	RCX4JATZ0153
R 117	CARBON RES. 1/4W J 33k Ω	RCX4JATZ0333
R 118	CARBON RES. 1/4W J 22k Ω	RCX4JATZ0223
R 119	CARBON RES. 1/4W J 47k Ω	RCX4JATZ0473
R 120	METAL RESISTOR 1W J 680 Ω or	RN01681HH001
	METAL RESISTOR 1W J 680 Ω	RN01681KE004
R 121	CARBON RES. 1/4W J 10 Ω or	RCX4JATZ0100
	CHIP RES. 1/10W J 10 Ω	RRXAJBBZ0100
R 122	CARBON RES. 1/4W J 330 Ω or	RCX4JATZ0331
	CHIP RES. 1/10W J 330 Ω	RRXAJBBZ0331
R 123	CARBON RES. 1/4W J 18k Ω or	RCX4JATZ0183
	CHIP RES. 1/10W J 18k Ω	RRXAJBBZ0183
R 124	CARBON RES. 1/4W J 4.7k Ω or	RCX4JATZ0472
	CHIP RES. 1/10W J 4.7k Ω	RRXAJBBZ0472
R 125	CARBON RES. 1/4W J 47k Ω	RCX4JATZ0473
R 126	CARBON RES. 1/4W J 100 Ω or	RCX4JATZ0101
	CHIP RES. 1/10W J 100 Ω	RRXAJBBZ0101
R 127	CARBON RES. 1/4W J 100k Ω	RCX4JATZ0104
R 128	PCB JUMPER D0.6-P5.0	JW5.0T
R 130	PCB JUMPER D0.6-P5.0	JW5.0T
R 131	PCB JUMPER D0.6-P5.0	JW5.0T
R 132	CARBON RES. 1/4W J 1.5k Ω or	RCX4JATZ0152
	CHIP RES. 1/10W J 1.5k Ω	RRXAJBBZ0152
R 133	CARBON RES. 1/4W J 1.5k Ω or	RCX4JATZ0152
	CHIP RES. 1/10W J 1.5k Ω	RRXAJBBZ0152
R 134	CARBON RES. 1/4W J 2.2k Ω or	RCX4JATZ0222
	CHIP RES. 1/10W J 2.2k Ω	RRXAJBBZ0222
R 135	CARBON RES. 1/4W J 2.7k Ω or	RCX4JATZ0272
	CHIP RES. 1/10W J 2.7k Ω	RRXAJBBZ0272
R 136	CARBON RES. 1/4W J 4.7k Ω or	RCX4JATZ0472
	CHIP RES. 1/10W J 4.7k Ω	RRXAJBBZ0472
R 137	CARBON RES. 1/4W J 6.8k Ω	RCX4JATZ0682
R 138	CARBON RES. 1/4W J 1k Ω	RCX4JATZ0102
R 139	CARBON RES. 1/4W J 470 Ω or	RCX4JATZ0471
	CHIP RES. 1/10W J 470 Ω	RRXAJBBZ0471
R 141	CARBON RES. 1/4W J 10k Ω or	RCX4JATZ0103
	CHIP RES. 1/10W J 10k Ω	RRXAJBBZ0103
R 144	CARBON RES. 1/4W J 10k Ω	RCX4JATZ0103
R 145	CARBON RES. 1/4W J 10k Ω	RCX4JATZ0103
R 146	CARBON RES. 1/4W J 10k Ω	RCX4JATZ0103
R 149	CARBON RES. 1/4W J 2.2k Ω	RCX4JATZ0222
R 153	CARBON RES. 1/4W J 560 Ω or	RCX4JATZ0561
	CHIP RES. 1/10W J 560 Ω	RRXAJBBZ0561
R 154	CARBON RES. 1/4W J 10k Ω or	RCX4JATZ0103
	CHIP RES. 1/10W J 10k Ω	RRXAJBBZ0103
R 155	CARBON RES. 1/4W J 8.2k Ω	RCX4JATZ0822
R 156	CARBON RES. 1/4W J 8.2k Ω	RCX4JATZ0822
R 157	CARBON RES. 1/4W J 1.8k Ω	RCX4JATZ0182
R 158	CARBON RES. 1/4W J 6.8k Ω or	RCX4JATZ0682
	CHIP RES. 1/10W J 6.8k Ω	RRXAJBBZ0682
R 159	CARBON RES. 1/4W J 6.8k Ω	RCX4JATZ0682
R 160	CARBON RES. 1/4W J 6.8k Ω or	RCX4JATZ0682
	CHIP RES. 1/10W J 6.8k Ω	RRXAJBBZ0682
R 161	CARBON RES. 1/4W J 390 Ω	RCX4JATZ0391
R 162	CARBON RES. 1/4W J 3.9k Ω or	RCX4JATZ0392
	CHIP RES. 1/10W J 3.9k Ω	RRXAJBBZ0392
R 163	CARBON RES. 1/4W J 100 Ω or	RCX4JATZ0101
	CHIP RES. 1/10W J 100 Ω	RRXAJBBZ0101
R 164	CARBON RES. 1/4W J 1k Ω or	RCX4JATZ0102
	CHIP RES. 1/10W J 1k Ω	RRXAJBBZ0102
R 165	CARBON RES. 1/4W J 680 Ω or	RCX4JATZ0681
	CHIP RES. 1/10W J 680 Ω	RRXAJBBZ0681
R 166	CARBON RES. 1/4W J 680 Ω or	RCX4JATZ0681
	CHIP RES. 1/10W J 680 Ω	RRXAJBBZ0681
R 167	CARBON RES. 1/4W J 680 Ω	RCX4JATZ0681
R 168	PCB JUMPER D0.6-P5.0	JW5.0T

Ref. No.	Description	Part No.
R 169	CARBON RES. 1/4W J 470 Ω	RCX4JATZ0471
R 171	CARBON RES. 1/4W J 2.2k Ω	RCX4JATZ0222
R 172	CARBON RES. 1/4W J 680 Ω	RCX4JATZ0681
R 173	CARBON RES. 1/4W J 560 Ω	RCX4JATZ0561
R 174	CARBON RES. 1/4W J 10k Ω or	RCX4JATZ0103
	CHIP RES. 1/10W J 10k Ω	RRXAJBBZ0103
R 175	CARBON RES. 1/4W J 10k Ω	RCX4JATZ0103
R 176	CARBON RES. 1/4W J 2.2k Ω or	RCX4JATZ0222
	CHIP RES. 1/10W J 2.2k Ω	RRXAJBBZ0222
R 177	CARBON RES. 1/4W J 2.2k Ω	RCX4JATZ0222
R 178	CARBON RES. 1/4W J 2.2k Ω or	RCX4JATZ0222
	CHIP RES. 1/10W J 2.2k Ω	RRXAJBBZ0222
R 307	CARBON RES. 1/4W J 560 Ω or	RCX4JATZ0561
	CHIP RES. 1/10W J 560 Ω	RRXAJBBZ0561
R 308	CARBON RES. 1/4W J 470 Ω	RCX4JATZ0471
R 309	PCB JUMPER D0.6-P5.0	JW5.0T
R 310	CARBON RES. 1/4W J 8.2k Ω	RCX4JATZ0822
R 311	CARBON RES. 1/4W J 680 Ω	RCX4JATZ0681
R 312	CARBON RES. 1/4W J 1k Ω or	RCX4JATZ0102
	CHIP RES. 1/10W J 1k Ω	RRXAJBBZ0102
R 313	CARBON RES. 1/4W J 1k Ω	RCX4JATZ0102
R 314	CARBON RES. 1/4W J 12k Ω or	RCX4JATZ0123
	CHIP RES. 1/10W J 12k Ω	RRXAJBBZ0123
R 315	CARBON RES. 1/4W J 6.8k Ω	RCX4JATZ0682
R 316	CARBON RES. 1/4W J 560 Ω	RCX4JATZ0561
R 317	CARBON RES. 1/4W J 2.7k Ω or	RCX4JATZ0272
	CHIP RES. 1/10W J 2.7k Ω	RRXAJBBZ0272
R 318	CARBON RES. 1/4W J 680k Ω or	RCX4JATZ0684
	CHIP RES. 1/10W J 680k Ω	RRXAJBBZ0684
R 319	CARBON RES. 1/4W J 2.2k Ω or	RCX4JATZ0222
	CHIP RES. 1/10W J 2.2k Ω	RRXAJBBZ0222
R 320	CARBON RES. 1/4W J 2.2k Ω or	RCX4JATZ0222
	CHIP RES. 1/10W J 2.2k Ω	RRXAJBBZ0222
R 321	CARBON RES. 1/4W J 2.2k Ω	RCX4JATZ0222
R 322	CARBON RES. 1/4W J 220 Ω or	RCX4JATZ0221
	CHIP RES. 1/10W J 220 Ω	RRXAJBBZ0221
R 323	CARBON RES. 1/4W J 220 Ω or	RCX4JATZ0221
	CHIP RES. 1/10W J 220 Ω	RRXAJBBZ0221
R 324	CARBON RES. 1/4W J 220 Ω or	RCX4JATZ0221
	CHIP RES. 1/10W J 220 Ω	RRXAJBBZ0221
R 325	PCB JUMPER D0.6-P5.0	JW5.0T
R 326	CARBON RES. 1/4W J 10k Ω or	RCX4JATZ0103
	CHIP RES. 1/10W J 10k Ω	RRXAJBBZ0103
R 327	CARBON RES. 1/4W J 22k Ω	RCX4JATZ0223
R 328	CARBON RES. 1/4W J 330k Ω or	RCX4JATZ0334
	CHIP RES. 1/10W J 330k Ω	RRXAJBBZ0334
R 329	CARBON RES. RD 1/4W J 4.7M Ω	RCX4JAXZ0475
R 330	CARBON RES. RD 1/4W J 4.7M Ω	RCX4JAXZ0475
R 331	CARBON RES. 1/4W J 56k Ω	RCX4JATZ0563
R 333	CARBON RES. 1/4W J 47k Ω or	RCX4JATZ0473
	CHIP RES. 1/10W J 47k Ω	RRXAJBBZ0473
R 334	CARBON RES. 1/4W J 56k Ω or	RCX4JATZ0563
	CHIP RES. 1/10W J 56k Ω	RRXAJBBZ0563
R 336	CARBON RES. 1/4W J 680k Ω	RCX4JATZ0684
R 337	CARBON RES. 1/4W J 1M Ω or	RCX4JATZ0105
	CHIP RES. 1/10W J 1M Ω	RRXAJBBZ0105
R 339	CARBON RES. 1/4W J 3.3k Ω or	RCX4JATZ0332
	CHIP RES. 1/10W J 3.3k Ω	RRXAJBBZ0332
R 340	CARBON RES. RD 1/4W J 3.3M Ω	RCX4JAXZ0335
R 351	CARBON RES. 1/4W J 100 Ω or	RCX4JATZ0101
	CHIP RES. 1/10W J 100 Ω	RRXAJBBZ0101
R 352	CARBON RES. 1/4W J 1M Ω	RCX4JATZ0105
R 353	PCB JUMPER D0.6-P5.0	JW5.0T
R 355	CARBON RES. 1/4W J 100 Ω	RCX4JATZ0101
R 356	CARBON RES. 1/4W J 560k Ω	RCX4JATZ0564
R 357	CARBON RES. 1/4W J 120 Ω	RCX4JATZ0121

Ref. No.	Description	Part No.
R 358	CARBON RES. 1/4W J 150k Ω	RCX4JATZ0154
R 359	CARBON RES. 1/4W J 560 Ω or	RCX4JATZ0561
	CHIP RES. 1/10W J 560 Ω	RRXAJBBZ0561
R 364	PCB JUMPER D0.6-P5.0	JW5.0T
R 365	PCB JUMPER D0.6-P5.0	JW5.0T
R 366	PCB JUMPER D0.6-P5.0	JW5.0T
R 371	PCB JUMPER D0.6-P5.0	JW5.0T
R 374	CARBON RES. 1/4W J 1.5k Ω	RCX4JATZ0152
R 381	CARBON RES. 1/4W J 6.8k Ω or	RCX4JATZ0682
	CHIP RES. 1/10W J 6.8k Ω	RRXAJBBZ0682
R 541	CARBON RES. 1/4W J 1.5k Ω	RCX4JATZ0152
R 542	CARBON RES. 1/4W J 47k Ω or	RCX4JATZ0473
	CHIP RES. 1/10W J 47k Ω	RRXAJBBZ0473
R 543	CARBON RES. 1/4W J 68k Ω or	RCX4JATZ0683
	CHIP RES. 1/10W J 68k Ω	RRXAJBBZ0683
R 544	CARBON RES. 1/4W J 22k Ω or	RCX4JATZ0223
	CHIP RES. 1/10W J 22k Ω	RRXAJBBZ0223
R 545	CARBON RES. 1/4W J 47k Ω or	RCX4JATZ0473
	CHIP RES. 1/10W J 47k Ω	RRXAJBBZ0473
R 547	CARBON RES. 1/4W J 33k Ω	RCX4JATZ0333
R 548	CARBON RES. 1/4W J 12k Ω	RCX4JATZ0123
R 549	CARBON RES. 1/4W J 3.3k Ω or	RCX4JATZ0332
	CHIP RES. 1/10W J 3.3k Ω	RRXAJBBZ0332
R 550	CARBON RES. 1/4W J 68k Ω	RCX4JATZ0683
R 551	CARBON RES. 1/4W J 3.3 Ω	RCX4JATZ03R3
R 552	CARBON RES. 1/4W J 3.3 Ω or	RCX4JATZ03R3
	CHIP RES. 1/10W J 3.3 Ω	RRXAJBBZ03R3
R 553	CARBON RES. 1/4W J 560 Ω or	RCX4JATZ0561
	CHIP RES. 1/10W J 560 Ω	RRXAJBBZ0561
R 554	CARBON RES. 1/4W J 560 Ω or	RCX4JATZ0561
	CHIP RES. 1/10W J 560 Ω	RRXAJBBZ0561
R 556	FUSE RES. 1/2W J 4.7 Ω or	RFX24R7UB001
	FUSE RES. 1/2W J 4.7 Ω or	RFX24R7KA007
	FUSE RES. 1/2W J 4.7 Ω	RFX24R7HH001
R 557	CARBON RES. 1/4W J 1k Ω or	RCX4JATZ0102
	CHIP RES. 1/10W J 1k Ω	RRXAJBBZ0102
R 558	CARBON RES. 1/4W J 560 Ω	RCX4JATZ0561
R 571	CARBON RES. 1/4W J 220 Ω	RCX4JATZ0221
R 572	CARBON RES. 1/4W J 1k Ω or	RCX4JATZ0102
	CHIP RES. 1/10W J 1k Ω	RRXAJBBZ0102
R 573	CARBON RES. 1/4W J 5.6k Ω	RCX4JATZ0562
R 574	CARBON RES. 1/4W J 5.6k Ω	RCX4JATZ0562
R 575	CEMENT RES. 5W k 2.2k Ω or	RW05222UB004
	CEMENT RES. 5W k 2.2k Ω	RW05222KA004
R 576	METAL RESISTOR 2W J 1k Ω or	RN02102HH001
	METAL RESISTOR 2W J 1k Ω or	RN02102KA015
	METAL RESISTOR 2W J 1k Ω	RN02102KE007
R 578	CARBON RES. 1/4W J 1 Ω	RCX4JATZ01R0
R 579	FUSE RES. 1/2W J 2.2 Ω or	RFX22R2UB001
	FUSE RES. 1/2W J 2.2 Ω or	RFX22R2KA007
	FUSE RES. 1/2W J 2.2 Ω	RFX22R2HH001
R 580	FUSE RES. 1W J 1.2 Ω or	RF011R2UB001
	FUSE RES. 1W J 1.2 Ω or	RF011R2KA008
	FUSE RES. 1W J 1.2 Ω	RF011R2HH001
R 582	CARBON RES. 1/4W J 4.7k Ω or	RCX4JATZ0472
	CHIP RES. 1/10W J 4.7k Ω	RRXAJBBZ0472
R 583	CARBON RES. 1/4W J 100k Ω	RCX4JATZ0104
R 584	CARBON RES. 1/4W J 56k Ω or	RCX4JATZ0563
	CHIP RES. 1/10W J 56k Ω	RRXAJBBZ0563
R 585	CARBON RES. 1/4W J 1k Ω or	RCX4JATZ0102
	CHIP RES. 1/10W J 1k Ω	RRXAJBBZ0102
R 586	CARBON RES. 1/4W J 120k Ω	RCX4JATZ0124
R 587	CARBON RES. 1/4W J 27k Ω	RCX4JATZ0273
R 588	CARBON RES. 1/4W J 100k Ω	RCX4JATZ0104
R 589	CARBON RES. 1/4W J 10k Ω	RCX4JATZ0103
R 590	CARBON RES. 1/4W J 1 Ω	RCX4JATZ01R0

Ref. No.	Description	Part No.
R 591	CARBON RES. 1/4W J 68k Ω or	RCX4JATZ0683
	CHIP RES. 1/10W J 68k Ω	RRXAJBBZ0683
R 592	CARBON RES. 1/4W J 6.8k Ω or	RCX4JATZ0682
	CHIP RES. 1/10W J 6.8k Ω	RRXAJBBZ0682
R 593	CARBON RES. 1/4W J 1k Ω	RCX4JATZ0102
R 594	CARBON RES. 1/4W J 22k Ω	RCX4JATZ0223
R 601	CEMENT RESISTOR 5W k 1.2 Ω or	RW051R2UB001
	CEMENT RESISTOR 5W k 1.2 Ω	RW051R2KA006
R 602	CARBON RES. 1/4W J 150k Ω	RCX4JATZ0154
R 603	CARBON RES. 1/4W J 150k Ω	RCX4JATZ0154
R 604	CARBON RES. 1/4W J 150k Ω	RCX4JATZ0154
R 605	CARBON RES. 1/4W J 120k Ω	RCX4JATZ0124
R 606	CARBON RES. 1/4W J 47k Ω	1345473S
R 607	CARBON RES. 1/4W J 47k Ω	1345473S
R 608	CARBON RES. 1/4W J 47k Ω	1345473S
R 609	CARBON RES. 1/4W J 47k Ω	1345473S
R 610	CARBON RES. 1/4W J 10k Ω	RCX4JATZ0103
R 611	CARBON RES. 1/4W J 15 Ω	1345150S
R 612	CARBON RES. 1/4W J 15 Ω	1345150S
R 614	CARBON RES. 1/4W J 27 Ω	1345270S
R 615	CARBON RES. 1/4W J 27 Ω	1345270S
R 617	CARBON RES. 1/4W J 1.8k Ω	RCX4JATZ0182
R 622	PCB JUMPER D0.6-P5.0	JW5.0T
R 623	CARBON RES. 1/4W J 680 Ω	RCX4JATZ0681
R 624	CARBON RES. 1/4W J 470 Ω	RCX4JATZ0471
R 627	CARBON RES. 1/4W J 3.9k Ω	RCX4JATZ0392
R 628	CARBON RES. 1/4W J 560k Ω	RCX4JATZ0564
R 629	CARBON RES. 1/4W J 560k Ω	RCX4JATZ0564
R 630	CARBON RES. 1/4W J 560k Ω	RCX4JATZ0564
R 631	CARBON RES. 1/4W J 560k Ω	RCX4JATZ0564
R 632	CARBON RES. 1/4W J 33k Ω or	RCX4JATZ0333
	CHIP RES. 1/10W J 33k Ω	RRXAJBBZ0333
R 633	CARBON RES. 1/4W J 180 Ω	RCX4JATZ0181
R 636	CARBON RES. 1/4W J 47 Ω	1345470S
R 638	CARBON RES. 1/4W J 82 Ω	1345820S
R 639	CARBON RES. 1/4W J 18 Ω	1345180S
R 640	CARBON RES. 1/4W J 18 Ω	1345180S
R 650	CARBON RES. 1/4W J 820 Ω	RCX4JATZ0821
R 651	CARBON RES. 1/4W J 1k Ω	RCX4JATZ0102
R 652	CARBON RES. 1/4W J 5.6k Ω	1345562S
R 653	CARBON RES. 1/4W J 10k Ω	RCX4JATZ0103
R 654	CARBON RES. 1/4W J 2.7k Ω	RCX4JATZ0272
R 655	CARBON RES. 1/4W J 3.9k Ω	RCX4JATZ0392
R 656	CARBON RES. 1/4W J 5.6k Ω	1345562
R 657	CARBON RES. 1/4W J 5.6k Ω	1345562
R 658	CARBON RES. 1/4W J 18k Ω	RCX4JATZ0183
R 659	CARBON RES. 1/4W J 18k Ω	RCX4JATZ0183
R 660	CARBON RES. 1/4W J 33k Ω	RCX4JATZ0333
R 661	CARBON RES. 1/4W J 12k Ω	RCX4JATZ0123
R 662	CARBON RES. 1/4W J 82 Ω	RCX4JATZ0820
R 663	CARBON RES. 1/4W J 10k Ω	RCX4JATZ0103
R 664	CARBON RES. 1/4W J 10k Ω	RCX4JATZ0103
R 665	CARBON RES. 1/4W J 47k Ω	RCX4JATZ0473
R 667	CARBON RES. 1/4W J 27k Ω or	RCX4JATZ0273
	CHIP RES. 1/10W J 27k Ω	RRXAJBBZ0273
R 668	CARBON RES. 1/4W J 47k Ω or	RCX4JATZ0473
	CHIP RES. 1/10W J 47k Ω	RRXAJBBZ0473
R 669	CARBON RES. 1/4W J 68 Ω	RCX4JATZ0680
R 670	PCB JUMPER D0.6-P5.0	JW5.0T
R 671	CARBON RES. 1/4W J 47k Ω or	RCX4JATZ0473
	CHIP RES. 1/10W J 47k Ω	RRXAJBBZ0473
R 673	CARBON RES. 1/4W J 10k Ω	1345103S
R 674	CARBON RES. 1/4W J 10k Ω	1345103S
R 675	CARBON RES. 1/4W J 33k Ω or	RCX4JATZ0333
	CHIP RES. 1/10W J 33k Ω	RRXAJBBZ0333
R 677	METAL RESISTOR 2W J 6.8 Ω	RN026R8HH001

Ref. No.	Description	Part No.
R 678	CARBON RES. 1/4W J 82 Ω	RCX4JATZ0820
R 679	CARBON RES. 1/4W J 100 Ω	RCX4JATZ0101
R 680	CARBON RES. 1/4W J 820 Ω	RCX4JATZ0821
R 681	CARBON RES. 1/4W J 1k Ω	RCX4JATZ0102
R 682	PCB JUMPER D0.6-P5.0 or	JW5.0T
	PCB JUMPER D0.6-P5.0	JW5.0T
R 683	CARBON RES. 1/4W J 470k Ω	RCX4JATZ0474
R 701	CARBON RES. 1/4W J 10k Ω	RCX4JATZ0103
R 702	CARBON RES. 1/4W J 10k Ω or	RCX4JATZ0103
	CHIP RES. 1/10W J 10k Ω	RRXAJBBZ0103
R 703	CARBON RES. 1/4W J 10k Ω	RCX4JATZ0103
R 704	CARBON RES. 1/4W J 2.2k Ω	RCX4JATZ0222
R 705	CARBON RES. 1/4W J 180 Ω or	RCX4JATZ0181
	CHIP RES. 1/10W J 180 Ω	RRXAJBBZ0181
R 706	CARBON RES. 1/4W J 100 Ω	RCX4JATZ0101
R 707	CARBON RES. 1/4W J 220 Ω or	RCX4JATZ0221
	CHIP RES. 1/10W J 220 Ω	RRXAJBBZ0221
R 708	CARBON RES. 1/4W J 68 Ω or	RCX4JATZ0680
	CHIP RES. 1/10W J 68 Ω	RRXAJBBZ0680
R 712	CARBON RES. 1/4W J 3.9k Ω	RCX4JATZ0392
R 713	CARBON RES. 1/4W J 150k Ω	RCX4JATZ0154
R 714	CARBON RES. 1/4W J 18k Ω or	RCX4JATZ0183
	CHIP RES. 1/10W J 18k Ω	RRXAJBBZ0183
R 715	CARBON RES. 1/4W J 10k Ω	RCX4JATZ0103
R 716	CARBON RES. 1/4W J 2.2k Ω	RCX4JATZ0222
R 719	CARBON RES. 1/4W J 1k Ω	RCX4JATZ0102
R 720	CARBON RES. 1/4W J 2.2k Ω or	RCX4JATZ0222
	CHIP RES. 1/10W J 2.2k Ω	RRXAJBBZ0222
R 721	CARBON RES. 1/4W J 10k Ω or	RCX4JATZ0103
	CHIP RES. 1/10W J 10k Ω	RRXAJBBZ0103
R 722	CARBON RES. 1/4W J 82 Ω	RCX4JATZ0820
R 723	CARBON RES. 1/4W J 2.7k Ω	RCX4JATZ0272
R 724	CARBON RES. 1/4W J 47k Ω or	RCX4JATZ0473
	CHIP RES. 1/10W J 47k Ω	RRXAJBBZ0473
R 725	CARBON RES. 1/4W J 47k Ω or	RCX4JATZ0473
	CHIP RES. 1/10W J 47k Ω	RRXAJBBZ0473
R 728	CARBON RES. 1/4W J 15k Ω or	RCX4JATZ0153
	CHIP RES. 1/10W J 15k Ω	RRXAJBBZ0153
R 730	CARBON RES. 1/4W J 100k Ω	RCX4JATZ0104
R 732	CARBON RES. 1/4W J 180 Ω or	RCX4JATZ0181
	CHIP RES. 1/10W J 180 Ω	RRXAJBBZ0181
R 733	CARBON RES. 1/4W J 220 Ω	RCX4JATZ0221
R 734	PCB JUMPER D0.6-P5.0	JW5.0T
R 824	CARBON RES. 1/4W J 220 Ω or	RCX4JATZ0221
	CHIP RES. 1/10W J 220 Ω	RRXAJBBZ0221
R 827	PCB JUMPER D0.6-P5.0	JW5.0T
R 828	CARBON RES. 1/4W J 10k Ω or	RCX4JATZ0103
	CHIP RES. 1/10W J 10k Ω	RRXAJBBZ0103
R 829	CARBON RES. 1/4W J 1k Ω or	RCX4JATZ0102
	CHIP RES. 1/10W J 1k Ω	RRXAJBBZ0102
R 830	PCB JUMPER D0.6-P5.0	JW5.0T
R 831	CARBON RES. 1/4W J 470k Ω or	RCX4JATZ0474
	CHIP RES. 1/10W J 470k Ω	RRXAJBBZ0474
R 832	CARBON RES. 1/4W J 22k Ω	RCX4JATZ0223
R 835	CARBON RES. 1/4W J 220 Ω or	RCX4JATZ0221
	CHIP RES. 1/10W J 220 Ω	RRXAJBBZ0221
R 836	CARBON RES. 1/4W J 470k Ω or	RCX4JATZ0474
	CHIP RES. 1/10W J 470k Ω	RRXAJBBZ0474
R 837	CARBON RES. 1/4W J 22k Ω	RCX4JATZ0223
R 840	CARBON RES. 1/4W J 33k Ω or	RCX4JATZ0333
	CHIP RES. 1/10W J 33k Ω	RRXAJBBZ0333
R 843	CARBON RES. 1/4W J 4.7k Ω or	RCX4JATZ0472
	CHIP RES. 1/10W J 4.7k Ω	RRXAJBBZ0472
R 844	CARBON RES. 1/4W J 180 Ω or	RCX4JATZ0181
	CHIP RES. 1/10W J 180 Ω	RRXAJBBZ0181
R 845	CARBON RES. 1/4W J 3.3 Ω	RCX4JATZ03R3

Ref. No.	Description	Part No.
R 847	CARBON RES. 1/4W J 22k Ω	RCX4JATZ0223
R 849	SWITCHING DIODE 1N4148M or	QDTZ01N4148M
	SWITCHING DIODE 1N4148M	NDTZ01N4148M
R 850	CARBON RES. 1/4W J 4.7k Ω	RCX4JATZ0472
R 853	METAL RESISTOR 2W J 6.8 Ω	RN026R8HH001
R 905	CARBON RES. 1/4W J 47k Ω	RCX4JATZ0473
R 906	CARBON RES. 1/4W J 330k Ω	RCX4JATZ0334
R 907	CARBON RES. 1/4W J 120k Ω or	RCX4JATZ0124
	CHIP RES. 1/10W J 120k Ω	RRXAJBBZ0124
J 17	CARBON RES. 1/4W J 4.7k Ω	RCX4JATZ0472
	SWITCHES	
SW 101	TACT SWITCH SKQSAB or	SST0101AL038
	PUSH SWITCH KSM0612B	SST0101HH003
SW 102	TACT SWITCH SKQSAB or	SST0101AL038
	PUSH SWITCH KSM0612B	SST0101HH003
SW 103	TACT SWITCH SKQSAB or	SST0101AL038
	PUSH SWITCH KSM0612B	SST0101HH003
SW 104	TACT SWITCH SKQSAB or	SST0101AL038
	PUSH SWITCH KSM0612B	SST0101HH003
SW 105	TACT SWITCH SKQSAB or	SST0101AL038
	PUSH SWITCH KSM0612B	SST0101HH003
SW 106	TACT SWITCH SKQSAB or	SST0101AL038
	PUSH SWITCH KSM0612B	SST0101HH003
	TRANSFORMERS	
T 571	H. DRIVE TRANS CST-95307 or	LTH00CPVD001
	H. DRIVE TRANS TE-1410	1150325
T 572	F.B.T. FCK-20B003 or	LTF00EPSM005
	F.B.T. 154-064V	LTF00EPGS004
T 601 ⚠	SWITCHING TRANS S1500 or	LTT00EPSA015
	SWITCHING TRANS 66259 or	LTT00EPKT005
	SWITCHING TRANS BCK35-05	LTT00EPXB004
	CRYSTAL OSCILLATORS	
X 101	CERAMIC RESONATOR FCR8.0MC or	FY0805PTE001
	CERAMIC RESONATOR 8MHz or	FY0805SMS001
	CERAMIC RESONATOR ZTT 8.00MHz	FY0805PLN001
X 301	CERAMIC RESONATOR CSB503F18	FY0504PMR001
X 302	CRYSTAL 4.43MHz or	1811387
	CRYSTAL 4.433619 MHz	FXD445LLN001
X 303	CRYSTAL 3.579545MHz or	FXC355TCU001
	CRYSTAL 3.58MHz or	1811291
	CRYSTAL 3.579545 MHz	FXD355LLN001
	MISCELLANEOUS	
	LEAD CLAMPER or	1790256
	LEAD CLAMPER 100MM	1790356
	EYELET TYPE D-1	0VM406868
A-A	LEAD WIRE(BLUE) UL1007TC AWG26 170MM	WX3601A6FF17
B-B	LEAD WIRE(YELLOW) UL1007TC AWG26 70MM	WX3401A6FF07
BC 571	BEAD INDUCTORS B16RH3.5X10X1.3X2	LLBF00ZXM001
BC 601	PCB JUMPER D0.6-P5.0	JW5.0T
BC 602	PCB JUMPER D0.6-P5.0	JW5.0T
BC 603	PCB JUMPER D0.6-P5.0	JW5.0T
BC 611	BEAD INDUCTORS B16RH3.5X10X1.3X2	LLBF00ZXM001
BC 612	PCB JUMPER D0.6-P5.0	JW5.0T
BC 613	PCB JUMPER D0.6-P5.0	JW5.0T
BC 614	PCB JUMPER D0.6-P5.0	JW5.0T
CF 31	CERAMIC TRAP TPWA02B or	FBE655PMR002
	CERAMIC TRAP EFCS5M65MW5	FBE655PMS002
CF 32	CERAMIC TRAP 6.0MHZ or	FBE605PMR002
	CERAMIC TRAP 6.0MHZ	FBE605PMS001
CF 33	CERAMIC FILTER 5.5MHZ or	FBB555PMR004
	CERAMIC FILTER 5.5MHZ	FBB555PMS001
CF 34	CERAMIC FILTER 6.5MHZ or	FBB655PMR003
	CERAMIC FILTER 6.5MHZ	FBB655PMS001
F 601 ⚠	FUSE T4.0AH/250V	PAGC20BAG402
FH 601	FUSE HOLDER FH-V-03078	XH01Z00DK001

Ref. No.	Description	Part No.
FH 602	FUSE HOLDER FH-V-03078	XH01Z00DK001
JK 701	RCA JACK 4P AV4-8.4-13Y or	JXRL040RP008
	RCA JACK AV4-8.4-13	JXRL040MY001
JK 702	RCA JACK 1P AV-8.4-9R or	JXRL010RP006
	RCA JACK AV-8.4-9	JXRL010MY001
JK 703	SCART JACK 21P 035 0 9849 00 or	JXGL210QT001
	SCART JACK 21P HRC-21V-02P	JXGL210RP001
PT 601 ⚠	POSISTOR ZPB53BL200C or	5790117
	POSISTOR PA2A5200C270Y00	QN4ZPA2A5200
RL 601 ⚠	POWER RELAY SDT-SS-112DM	MRNDC12QN008
RS 101	REMOTE RECEIVER PIC-12042SRB	USESJRSKK016
SF 31	SAW FILTER K2958M(38.0M)	FBB386PEB001
TP 7	TEST PIN or	1700093
	TEST PIN SJT-743-3	1740354
TP 8	TEST PIN or	1700093
	TEST PIN SJT-743-3	1740354
TP 10	TEST PIN or	1700093
	TEST PIN SJT-743-3	1740354
TP 501	TEST PIN or	1700093
	TEST PIN SJT-743-3	1740354
TU 1	TUNER UNIT TELE4-043B	UTUNPSDAL011
VR 541	CARBON P.O.T. 50k Ω B(H) or	VRCB503HH009
	CARBON P.O.T. 50k Ω B	138J784
VR 542	CARBON P.O.T. 10k Ω B(H) or	VRCB103HH009
	CARBON P.O.T. 10k Ω B	138J781
VR 621	CARBON P.O.T. 10k Ω B(H) or	VRCB103HH009
	CARBON P.O.T. 10k Ω B	138J781
W 601 ⚠	AC COAD	5750112
B- 5	LED HOLDER	0EM300760
B- 6	HEAT SINK(PBY)	0EM403470
B- 7	HEAT SINK(PBX)	0EM403469
B- 8	HEAT SINK(PBZ)	0EM403471
B- 9	HEAT SINK(PBV)	0EM403467
L- 1	SCREW B-TIGHT 3X8 BIND HEAD+ or	GBMB3080
	SCREW B-TIGHT 3X8 BIND HEAD+	GBMB3080
L- 2	SCREW C-TIGHT M3X4 BIND HEAD+ or	GBMC3040
	SCREW B-TIGHT 3X8 BIND HEAD+	GBMB3080

Teletext CBA

Ref. No.	Description	Part No.
	Teletext CBA	0ESA01880
	Consists of the following:	
	CAPACITORS	
C 911	CERAMIC CAP. (AX) F Z 0.01μF/25V or	CDA1EZT0F103
C 912	CERAMIC CAP.(AX) B K 220pF/50V	CCA1JKT0B221
C 913	CERAMIC CAP.(AX) CH J 15pF/50V	CCA1JJTCH150
C 914	CERAMIC CAP.(AX) CH J 15pF/50V	CCA1JJTCH150
C 915	SEMICONDUCTIVE CAP. SR K 0.1μF/25V or	CDA1EKS0X104
	SEMICONDUCTIVE CAP. SR K 0.1μF/25V	12Y2104S
C 916	CERAMIC CAP.(AX) B J 1000pF/50V	CCA1JKT0B102
C 917	CERAMIC CAP.(AX) B K 220pF/50V	CCA1JKT0B221
C 918	ELECTROLYTIC CAP. 22μF/50V M	CE1JMASDL220
C 919	ELECTROLYTIC CAP. 0.1μF/50V M	CE1JMASDL0R1
C 920	CERAMIC CAP. (AX) F Z 0.01μF/25V or	CDA1EZT0F103
C 922	SEMICONDUCTIVE CAP. SR K 0.1μF/25V or	CDA1EKS0X104
	SEMICONDUCTIVE CAP. SR K 0.1μF/25V	12Y2104S
C 923	CERAMIC CAP.(AX) B J 1000pF/50V	CCA1JKT0B102
C 927	ELECTROLYTIC CAP. 0.47μF/50V M	CE1JMASDLR47
C 930	CERAMIC CAP.(AX) SL J 47pF/50V	CCA1JJTSL470
C 931	CERAMIC CAP.(AX) SL J 47pF/50V	CCA1JJTSL470
C 933	ELECTROLYTIC CAP. 220μF/6.3V M	CE0KMASDL221
C 934	CERAMIC CAP.(AX) SL J 100pF/50V	CCA1JJSSL101
C 935	CERAMIC CAP.(AX) B K 330pF/50V	CCA1JKT0B331
C 939	CERAMIC CAP.(AX) B K 220pF/50V	CCA1JKT0B221

Ref. No.	Description	Part No.
	CONNECTORS	
CN901B	PCB CONNECTOR 7P	1770990
CN902B	PCB CONNECTOR 5P	1770988
	DIODES	
D 901	SWITCHING DIODE 1N4148M or	QDTZ01N4148M
	SWITCHING DIODE 1N4148M	NDTZ01N4148M
D 912	SWITCHING DIODE 1N4148M or	QDTZ01N4148M
	SWITCHING DIODE 1N4148M	NDTZ01N4148M
D 913	SWITCHING DIODE 1N4148M or	QDTZ01N4148M
	SWITCHING DIODE 1N4148M	NDTZ01N4148M
D 914	SWITCHING DIODE 1N4148M or	QDTZ01N4148M
	SWITCHING DIODE 1N4148M	NDTZ01N4148M
D 915	SWITCHING DIODE 1N4148M or	QDTZ01N4148M
	SWITCHING DIODE 1N4148M	NDTZ01N4148M
D 916	SWITCHING DIODE 1N4148M or	QDTZ01N4148M
	SWITCHING DIODE 1N4148M	NDTZ01N4148M
D 917	SWITCHING DIODE 1N4148M or	QDTZ01N4148M
	SWITCHING DIODE 1N4148M	NDTZ01N4148M
D 926	SWITCHING DIODE 1N4148M or	QDTZ01N4148M
	SWITCHING DIODE 1N4148M	NDTZ01N4148M
	ICS	
IC 911	IC: TELETEXT DECODER CF70211ANW	NSZDA0ZTY003
IC 912	IC CF72306	NSMFA0STY001
IC 914	IC: RESET MN1380-R	QSMLA0ZMS001
COILS		
L 911	INDUCTOR 22μH-K-26FT or	LLAXKATTU220
	INDUCTOR 22μH-K-26FT	LLAXKDTKA220
L 912	PCB JUMPER D0.6-P5.0	JW5.0T
	TRANSISTORS	
Q 901	TRANSISTOR KTA1266(GR) or	NQS40KTA1266
	TRANSISTOR KTA1267(GR) or	NQS10KTA1267
	TRANSISTOR 2SA1318(T)-AANP or	2SA1318TZ
	TRANSISTOR 2SA1318(U)-AANP or	2SA1318UZ
	TRANSISTOR 2SA1015-GR-TPE2	QQS102SA1015
Q 911	TRANSISTOR KTC3198GR TO-92 or	NQS40KTC3198
	TRANSISTOR KTC3199(GR) or	NQS10KTC3199
	TRANSISTOR 2SC3331(T) or	QSC3331TNPAA
	TRANSISTOR 2SC3331(U) or	QSC3331UNPAA
	TRANSISTOR 2SC1815-GR-TPE2	QQS102SC1815
Q 912	TRANSISTOR KTC3198GR TO-92 or	NQS40KTC3198
	TRANSISTOR KTC3199(GR) or	NQS10KTC3199
	TRANSISTOR 2SC3331(T) or	QSC3331TNPAA
	TRANSISTOR 2SC3331(U) or	QSC3331UNPAA
	TRANSISTOR 2SC1815-GR-TPE2	QQS102SC1815
	RESISTOR	
R 901	CARBON RES. 1/4W J 470 Ω	RCX4JATZ0101
	CHIP RES. 1/10W 470 Ω	RRXAJBBZ0101
R 902	CARBON RES. 1/4W J 1k Ω	RCX4JATZ0102
	CHIP RES. 1/10W 1k Ω	RRXAJBBZ0102
R 903	CARBON RES. 1/4W J 330k Ω	RCX4JATZ0334
	CHIP RES. 1/10W 330k Ω	RRXAJBBZ0334
R 904	CARBON RES. 1/4W J 120k Ω	RCX4JATZ0124
	CHIP RES. 1/10W 120k Ω	RRXAJBBZ0124
R 911	CARBON RES. 1/4W J 10k Ω	RCX4JATZ0103
R 912	CARBON RES. 1/4W J 1k Ω	RCX4JATZ0102
R 913	CARBON RES. 1/4W J 1k Ω	RCX4JATZ0102
R 914	CARBON RES. 1/4W J 2.2k Ω	RCX4JATZ0222
R 918	CARBON RES. 1/4W J 220 Ω	RCX4JATZ0221
R 921	CARBON RES. 1/4W J 100k Ω	RCX4JATZ0104
R 922	CARBON RES. 1/4W J 100k Ω	RCX4JATZ0104
R 923	CARBON RES. 1/4W J 4.7k Ω	RCX4JATZ0472
R 924	CARBON RES. 1/4W J 4.7k Ω	RCX4JATZ0472
R 925	CARBON RES. 1/4W J 4.7k Ω	RCX4JATZ0472
R 926	CARBON RES. 1/4W J 4.7k Ω	RCX4JATZ0472
R 927	CARBON RES. 1/4W J 8.2k Ω	RCX4JATZ0822
R 928	CARBON RES. 1/4W J 8.2k Ω	RCX4JATZ0822

Ref. No.	Description	Part No.
R 929	CARBON RES. 1/4W J 8.2k Ω	RCX4JATZ0822
R 931	PCB JUMPER D0.6-P5.0	JW5.0T
R 933	CARBON RES. 1/4W J 10k Ω	RCX4JATZ0103
R 934	CARBON RES. 1/4W J 15k Ω	RCX4JATZ0153
R 936	CARBON RES. 1/4W J 1k Ω	RCX4JATZ0102
	MISCELLANEOUS	
X911	CRYSTAL OSCILLATOR 13.875MHz	FXD136LCT002

CRT CBA

Ref. No.	Description	Part No.
	CRT CBA Consists of the following:	————
	CAPACITORS	
C 501	CERAMIC CAP.(AX) B k 270pF/50V or	CCA1JKT0B271
	CHIP CERAMIC CAP. B k 270pF/50V	CHE1JKB0B271
C 502	CERAMIC CAP.(AX) B k 220pF/50V or	CCA1JKT0B221
	CHIP CERAMIC CAP. B k 220pF/50V	CHE1JKB0B221
C 503	CERAMIC CAP.(AX) B k 330pF/50V or	CCA1JKT0B331
	CHIP CERAMIC CAP. B k 330pF/50V	CHE1JKB0B331
C 504	CERAMIC CAP. 0.001μF/2KV or	CCD3DKP0B102
	CERAMIC CAP. 0.001μF/2KV or	6220585
	CERAMIC CAP. 0.001μF/2KV	CCD3DKD0B102
C 505	ELECTROLYTIC CAP. 10μF/50V M	CE1JMASDL100
C 506	CERAMIC CAP.(AX) F Z 0.01μF/25V	CDA1EZT0F103
CL501A	WIRE HOLDER 5C 51048-0500 or	XW01D05NF001
	WIRE HOLDER 5C	XW01B05NF001
CL501B	WIRE HOLDER 5C 51048-0500 or	XW01D05NF001
	WIRE HOLDER 5C	XW01B05NF001
CL502A	WIRE HOLDER 4P 51048-0400 or	XW01D04NF001
	WIRE HOLDER 4P 51039-0400	XW01B04NF001
CL502B	WIRE HOLDER 4P 51048-0400 or	XW01D04NF001
	WIRE HOLDER 4P 51039-0400	XW01B04NF001
	CONNECTOR	
CN 501	CONNECTOR PIN 1P LV or	1700576
	CONNECTOR PIN 1P RT-01N-2.3A or	1730688
	CONNECTOR PIN 1P LV	JTEA000LC001
	DIODE	
D 502	RECTIFIER DIODE ERA15-02KFRB	QDNZ0ERA1502
	INDUCTOR	
L 501	INDUCTOR 180μH k 5FT or	LLARKCSTU181
	INDUCTOR 180μH k 5FT	LLARKDSKA181
	TRANSISTORS	
Q 501	TRANSISTOR 2SC2482 TPE6	QQSZ02SC2482
Q 502	TRANSISTOR 2SC2482 TPE6	QQSZ02SC2482
Q 503	TRANSISTOR 2SC2482 TPE6	QQSZ02SC2482
	RESISTORS	
R 501	METAL RESISTOR 1W J 15k Ω or	RN01153HH001
	METAL RESISTOR 1W J 15k Ω or	RN01153KA015
	METAL RESISTOR 1W J 15k Ω	RN01153KE004
R 502	METAL RESISTOR 1W J 15k Ω or	RN01153HH001
	METAL RESISTOR 1W J 15k Ω or	RN01153KA015
	METAL RESISTOR 1W J 15k Ω	RN01153KE004
R 503	METAL RESISTOR 1W J 15k Ω or	RN01153HH001
	METAL RESISTOR 1W J 15k Ω or	RN01153KA015
	METAL RESISTOR 1W J 15k Ω	RN01153KE004
R 504	CARBON RES. 1/4W J 2.7k Ω	RCX4JATZ0272
R 505	CARBON RES. 1/4W J 2.7k Ω or	RCX4JATZ0272
	CHIP RES. 1/10W J 2.7k Ω	RRXAJBBZ0272
R 506	CARBON RES. 1/4W J 2.7k Ω	RCX4JATZ0272
R 507	CARBON RES. 1/4W J 680 Ω	RCX4JATZ0681
R 508	CARBON RES. 1/4W J 680 Ω or	RCX4JATZ0681
	CHIP RES. 1/10W J 680 Ω	RRXAJBBZ0681
R 509	CARBON RES. 1/4W J 680 Ω	RCX4JATZ0681
R 510	CARBON RES. 1/4W J 33 Ω	RCX4JATZ0330
R 511	CARBON RES. 1/4W J 33 Ω or	RCX4JATZ0330
	CHIP RES. 1/10W J 33 Ω	RRXAJBBZ0330

Ref. No.	Description	Part No.
R 512	CARBON RES. 1/4W J 33 Ω or	RCX4JATZ0330
	CHIP RES. 1/10W J 33 Ω	RRXAJBBZ0330
R 513	CARBON RES. 1/4W J 100 Ω	RCX4JATZ0101
R 514	CARBON RES. 1/4W J 100 Ω or	RCX4JATZ0101
	CHIP RES. 1/10W J 100 Ω	RRXAJBBZ0101
R 515	CARBON RES. 1/4W J 100 Ω	RCX4JATZ0101
R 516	CARBON RES. 1/4W J 2.2k Ω or	RCX4JATZ0222
	CHIP RES. 1/10W J 2.2k Ω	RRXAJBBZ0222
R 517	CARBON RES. 1/4W J 2.2k Ω or	RCX4JATZ0222
	CHIP RES. 1/10W J 2.2k Ω	RRXAJBBZ0222
R 518	CARBON RES. 1/4W J 2.2k Ω or	RCX4JATZ0222
	CHIP RES. 1/10W J 2.2k Ω	RRXAJBBZ0222
	MISCELLANEOUS	
JK 501	CRT SOCKET ISHS40S	JSCC290PK004
LCN501	RIBBON WIRE 5P UL2468 AWG26 F	WX1L9500-002
LCN502	RIBBON WIRE 4P UL2468 AWG26 F	WX1L9500-001

Chassis Electrical Parts

Ref. No.	Description	Part No.
	LEAD CLAMPER or	1790256
	LEAD CLAMPER 100MM	1790356
L 601 ⚠	DEGAUSSING COIL or If the CRT is ued A48JSK61X01 (F)	LLBH00ZTZ012
	DEGAUSSING COIL or If the CRT is used A48KRD89X01 510UFB22-TG52 (DPY) A48QAD220X010 A48JRV90X22	LLBH00ZTZ014
	DEGAUSSING COIL DC-1132A If the CRT is used A48KRD89X01 510UFB22-TG52 (DPY) A48QAD220X010 A48JRV90X22	LLBH00ZXA014
LCN453	WIRE ASSEMBLY WX1L7500-004A or	WX1L7500-004
	CRT GND WIRE or	WX1L7820-003
	CRT GND WIRE	WX1L8500-005
LCN801	WIRE ASSEMBLY 2P UL1061 AWG26 -F-	WX1L9500-003
LCN802	WIRE ASSEMBLY 2P	WX1L9500-004
SP 801	SPEAKER S08F05	DSD0408XQ003
SP 802	SPEAKER S08F05	DSD0408XQ003
V 451 ⚠	CRT A48JSK61X01(F) or	TCRT190J8001
	CRT A48KRD89X01 or	TCRT190SM007
	CRT 510UFB22-TC52(DPY) or	TCRT190CP008
	CRT A48QAD220X010 or	TCRT1C0GS010
	CRT A48JRV90X22	TCRT1C0QS001

Printed in Japan
970404 SY
L9531RB.